JPL D-13963, Revision S

Earth Observing System

Multi-angle Imaging Spectro-Radiometer

Data Products Specifications

-Incorporating the Science Data Processing Interface Control Document

Mike Bull
Jason Matthews
Duncan McDonald
Alexander Menzies
Catherine Moroney
Kevin Mueller
Susan Paradise
Mike Smyth

Jet Propulsion Laboratory, California Institute of Technology

Jet Propulsion Laboratory
California Institute of Technology

September 20, 2010

JPL D-13963, Revision S

Multi-angle Imaging SpectroRadiometer (MISR)

Data Products Specifications

-Incorporating the Science Data Processing Interface Control Document

APPROVALS:

David J. Diner
MISR Principal Investigator

Earl Hansen
MISR Project Manager

Approval signatures are on file with the MISR Project.
To determine the latest released version of this document, consult the MISR web site (http://www-misr.jpl.nasa.gov).

Jet Propulsion Laboratory
California Institute of Technology

Copyright 2010 California Institute of Technology. Government sponsorship acknowledged.

The research described in this publication was carried out at the Jet Propulsion Laboratory, California Institute of Technology, under a contract with the National Aeronautics and Space Administration.

Document Change Log

Revision	Date	Affected Portions and Description
Release A	21 July 1997	All, original release
Release B*	12 March 1998	Section 8: Aerosol/Surface completely redone
Release B	31 September 1998	All, complete update
Release C	14 December 1999	All, complete update for launch
Release D	05 February 2002	All, updates for V2.1.4 Software Delivery. Section 8 change bars are not comprehensive. Geolocation Appendix A. added.
Release E	7 January 2003	All, updates for V2.2 Software Delivery
Release F	14 February 2003	Sections 8, 9: updates for V2.2_i2 Software Delivery
Release G	3 April 2003	Sections 4, 5, 6, 7, 8, 9: updates for V2.2_i5 Software Delivery
Release H	7 April 2003	Sections 8: updates for V2.2_i6 Software Delivery
Release I	10 July 2003	Section 1, 2, 3, and 10: Initial version of Level 3 for V2.2_i10 Software Delivery Section 2: Update applicable product versions
Release J	3 October 2003	Section 6, 7, and 8: updates for V3.0 Software Delivery Section 2: Update applicable product versions
Release K	12 December 2003	Section 7, 8 , 9 and 10: updates for V3.1 Software Delivery Section 2: Update applicable product versions
Release L	1 November 2004	Section 6, 7, 8, 9: updates for V3.2 Software Delivery Section 2: Update applicable product versions
Release M	13 May 2005	Section 6, 7, 8, 10: updates for V3.3 Software Deliv ery Section 2: Update applicable product versions
Release N	1 December 2005	Section 7, 10: Updates for V4.0 Software Delivery Section 1, 2: Update applicable product versions
Release O	27 October 2006	Section 8: Updates for V4.1 Software Delivery Section 11: Addition of MISR Level 3 component netCDF products
Release P	19 November 2007	Section 2,6,7,8,10,11: Updates for V4.2 Software Delivery
Release Q	28 May 2008	Updates for V4.3 Software Delivery
Release R	18 November 2008	Section 2, 6, 9, 10, 11: Update for V5.0.5 Software Delivery
Release S	9 September 2010	Section 10: Update for V5.0.9 Software Delivery

TBD List

Location	Description
Section 12	Level 3 Joint section is currently empty. It will be completed when L3 data becomes available.

Which Product Versions Does this Document Cover?

Product Filename Prefix	Version Number in Filename	Brief Description	Section
MISR_AM1_CGGRP	F02_0007, F02_0009, F02_0011, F02_0013, F02_0015, F02_0017, F02_0019, F02_0021, F02_0023 F04_0025	L3 Component Global Georectified Product	Sec. [10.0]
MISR_AM1_CGAL	F06_0012, F06_0014, F06_0016, F06_0018, F06_0020, F06_0022 F06_0024 netCDF: F02_0020 F04_0022 F04_0024	L3 Component Global Albedo Product	
MISR_AM1_CGCL	F02_0014, F02_0016, F02_0018, F02_0020, F02_0022 F02_0024 netCDF: F02_0020 F04_0022 F04_0024	L3 Component Gloabl Cloud Product	
MISR_AM1_CGAS	F11_0027 F13_0029	L3 Component Global Aerosol Product	

	F15_0031 netCDF: F02_0025 F04_0027 F06_0029 F08_0031		
MISR_AM1_CGLS	F04_0016, F04_0017,F04_0019, F04_0021, F04_0023, F04_0025, F04_0027 F04_0029 F04_0031 netCDF: F02_0025 F04_0027 F04_0029 F04_0031	L3 Component Global Land/Surface Product	
MISR_AM1_CFbA	F01_0001	L3 Cloud Fraction by Altitude Product	
MISR_AM1_CMV	F01_0001	L3 Cloud Motion Vector Product	
MISR_AM1_AS_AEROSOL	F12_0022	L2 Aerosol Retrievals	Sec. [8.0]
MISR_AM1_AS_LAND	F07_0022	L2 Land Surface Retrievals	
MISR_AM1_TC_STEREO	F08_0017	L2 Stereo Heights/Winds	Sec. [7.0]
MISR_AM1_TC_CLASSIFIERS	F06_0011	L2 Cloud Classifiers	
MISR_AM1_TC_ALBEDO	F05_0011	L2 Cloud Albedos	

MISR_AM1_GRP_TERRAIN	F02_0020, F03_0022, F03_0023, F03_0024	L1B2 Georectified Radiances	Sec. [6.0]
MISR_AM1_GRP_ELLIPSOID	F02_0020, F03_0022, F03_0023, F03_0024	L1B2 Ellipsoid-Projected Radiances	
MISR_AM1_GRP_TERRAIN_LM	F02_0019, F02_0020, F03_0022, F03_0023, F03_0024	L1B2 Georectified Radiances, Local Mode	
MISR_AM1_GRP_ELLIPSOID_LM	F02_0019, F02_0020, F03_0022, F03_0023, F03_0024	L1B2 Ellipsoid-Projected Radiances, Local Mode	
MISR_AM1_GRP_RCCM	F04_0025, F03_0025	L2 Camera-by-Camera Cloud Mask L2 RCCM Hits Files	
MISR_AM1_GP_GMP	F03_0010, F03_0011, F03_0012, F03_0013	L1 Sun/Camera Angles	
MISR_AM1_ELLIPSOID_GM_BR	F02_0020, F03_0022, F03_0023, F03_0024	L1 JPEG Browse Image	
MISR_AM1_RP	F02_0016, F02_0017, F02_0018, F02_0019, F02_0020, F03_0022, F03_0023, F03_0024	L1B1 Radiances	Sec. [5.0]
MISR_AM1_FM_SCI	F02_0016, F02_0017, F02_0018, F02_0019, F02_0020, F03_0022, F03_0023, F03_0024	L1A Instrument Data Numbers	Sec. [4.0]
MISR_AM1_FM_MTR	F01_0005, F01_0006,	L1A Motor Currents	Sec. [4.0]

	F01_0007		
MISR_AM1_FM_OBC	F01_0005, F01_0006, F01_0007	L1A On-Board Calibrator Data	
MISR_AM1_FM_ENG	F01_0006, F01_0007, F01_0008,	L1A Engineering Data	
MISR_AM1_FM_NAV	0006, 0007, 0008	L1A Raw Orbit Navigation Data	
MISR_AM1_FM_CAL	F01_0006, F01_0007, F01_0008	L1A Calibration Experiment Data	
Various		Ancillary Products	Sec. [9.0]
MISR_AM1_ARP_INFLTCAL	F02	Dynamic Rad./Calibration Coefficients	
MISR_AM1_ARP_PRFLTCHAR	F02_0002	Static Preflight Instrument Specs.	
MISR_AM1_ARP_PRFLTCAL	F02_0004, F02_0005	Static Preflight Rad./Calibration Specs. Static Calibration Algorithm Data	
MISR_AM1_ARP_CONFIG	F03_0003	Geographic Data (DEM)	
MISR_AM1_AGP	F01_24	Camera Geometric Model	
MISR_AM1_CGM	F01_0007	Aerosol Climatology (Particle Models)	
MISR_AM1_ACP_APOP	F05_0014	Aerosol Climatology (Particle	
MISR_AM1_ACP_MIXTURE	F05_0019	Mixtures)	
MISR_AM1_TASC	F02_0004	Terretrial Atmosphere and Surface Climatology Dataset	

TABLE OF CONTENTS

1 MISR DATA PRODUCT SPECIFICATION DOCUMENT 1

1.1 OVERVIEW 1
1.2 SCOPE OF MISR DPS DOCUMENT 1
1.3 CONTROLLING DOCUMENTS 2
1.4 APPLICABLE DOCUMENTS 3

2 MISR SCIENCE DATA PROCESSING 5

2.1 OVERVIEW 5
2.2 MISR SDP: ANCILLARY DATA SET GENERATION 5
2.2.1 MISR SDP Ancillary Data Set Dependencies 5
2.2.2 MISR SDP Ancillary Data Sets 6
2.3 MISR SDP: EXTERNAL DATA SET DEPENDENCIES 6
2.4 MISR SDP: STANDARD SCIENCE DATA PRODUCTS 8

3 MISR PRODUCTS: FILE FORMAT OVERVIEW 12

3.1 HDF AND HDF-EOS FILE STRUCTURES 12
3.2 MISR PRODUCTS: DATA FORMATS 12
3.3 MISR PRODUCTS: METADATA FORMATS 14
3.3.1 Structural Metadata 14
3.3.2 Core Metadata 14
3.3.3 Product Metadata 15
3.3.4 File Metadata 15
3.3.5 Per-grid/Per-swath Metadata 15
3.3.6 Per-block Metadata 15
3.4 MISR PRODUCTS: QUALITY ASSURANCE FORMATS 16
3.4.1 QA Fields 16
3.4.2 Standard QA Vdatas and VGroups 17
3.4.3 Special QA Vdatas and VGroups 18

4 MISR LEVEL 1A REFORMATTED ANNOTATED PRODUCT 20

4.1 MISR LEVEL 1A PRODUCT GRANULE NAMES 20
4.2 MISR LEVEL 1A PRODUCT GRANULE BRIEF DESCRIPTIONS 20
4.2.1 MISR LEVEL 1A MIL1A CCD Science Instrument Data 20
4.2.2 MISR LEVEL 1A MI1AC CCD Calibration Data 21
4.2.3 MISR LEVEL 1A MI1AMOT Motor Data 21
4.2.4 MISR LEVEL 1A MI1ANAV Navigation Data 21
4.2.5 MISR LEVEL 1A MI1AENG Engineering Data 21
4.2.6 MISR LEVEL 1A MI1AOBC On-Board Calibration Data 21
4.3 MISR LEVEL 1A PRODUCT GRANULE DATA SETS 22
4.4 MISR LEVEL 1A PRODUCT SHARED SWATH DESCRIPTORS 23
4.5 MISR LEVEL 1A MIL1A CCD SCIENCE INSTRUMENT DATA 24
4.5.1 File Metadata Description 24
4.5.2 Per-swath Metadata Description 24
4.5.3 Per-block Metadata Description 25
4.5.4 Per-line Metadata Description 25
4.5.5 Per-pixel Metadata Description 25
4.5.6 Swath Data Set Descriptions 25
4.5.7 CCD Science Product QA 28
4.6 MISR LEVEL 1A MI1AC CCD CALIBRATION DATA 29
4.6.1 File Metadata Description 29
4.6.2 Per-swath Metadata Description 29
4.6.3 Per-block Metadata Description 29

4.6.4 Per-line Metadata Description *29*
4.6.5 Per-pixel Metadata Description *30*
4.6.6 Swath Data Set Descriptions *30*
4.6.7 Per-swath QA Metadata *33*
4.7 MISR LEVEL 1A MI1AMOT MOTOR DATA 33
4.7.1 File Metadata Description *33*
4.7.2 Per-swath Metadata Description *33*
4.7.3 Per-block Metadata Description *34*
4.7.4 Per-line Metadata Description *34*
4.7.5 Per-pixel (or -sample) Metadata Description *34*
4.7.6 Swath Data Set Descriptions *34*
4.7.7 Per-swath QA Metadata *36*
4.8 MISR LEVEL 1A MI1ANAV NAVIGATION DATA 36
4.8.1 File Metadata Description *36*
4.8.2 Per-swath Metadata Description *36*
4.8.3 Per-block Metadata Description *37*
4.8.4 Per-line Metadata Description *37*
4.8.5 Per-pixel (or -sample) Metadata Description *37*
4.8.6 Swath Data Set Descriptions *37*
4.8.7 Per-swath QA Metadata *39*
4.9 MISR LEVEL 1A MI1AENG1 ENGINEERING DATA 39
4.9.1 File Metadata Description *39*
4.9.2 Per-swath Metadata Description *39*
4.9.3 Per-block Metadata Description *39*
4.9.4 Per-line Metadata Description *40*
4.9.5 Per-pixel (or -sample) Metadata Description *40*
4.9.6 Swath Data Set Descriptions *41*
4.9.7 Per-swath QA Metadata *46*
4.10 MISR LEVEL 1A MI1AOBC ON-BOARD CALIBRATION DATA 47
4.10.1 File Metadata Description *47*
4.10.2 Per-swath Metadata Description *47*
4.10.3 Per-block Metadata Description *47*
4.10.4 Per-line Metadata Description *47*
4.10.5 Per-pixel (or -sample) Metadata Description *47*
4.10.6 Swath Data Set Descriptions *48*
4.10.7 Per-swath QA Metadata *50*

5 MISR LEVEL 1B1 RADIOMETRIC PRODUCT 51

5.1 MISR LEVEL 1B1 PRODUCT GRANULE NAMES 51
5.2 MISR LEVEL 1B1 PRODUCT GRANULE BRIEF DESCRIPTIONS 51
5.3 MISR LEVEL 1B1 PRODUCT GRANULE DATA SETS 51
5.4 MISR LEVEL 1B1 MI1B1 RADIOMETRIC PRODUCT 52
5.4.1 File Metadata Description. *52*
5.4.2 Per-swath Metadata Description *52*
5.4.3 Per-line Metadata Description *53*
5.4.4 Per-pixel Metadata Description *53*
5.4.5 Swath Data Set Descriptions *54*
5.4.5.1 Field dimension and Spatial Resolution descriptions 54
5.4.6 Radiometric Product QA Metadata *55*

6 MISR LEVEL 1B2 GEORECTIFIED RADIANCE PRODUCT 56

6.1 MISR LEVEL 1B2 PRODUCT GRANULE NAMES 56
6.2 MISR LEVEL 1B2 GEORECTIFIED RADIANCE PRODUCT GRANULE BRIEF DESCRIPTIONS 56
6.3 MISR LEVEL 1B2 GEORECTIFIED RADIANCE PRODUCT GRANULE DATA SETS 57
6.4 MISR LEVEL 1B2 MI1B2E AND MB2LME ELLIPSOID-PROJECTED PRODUCTS 58

6.4.1 File Metadata Description ... *58*
6.4.2 Per-grid Metadata Description ... *60*
6.4.3 Per-block Metadata Description ... *61*
6.4.4 Per-line Metadata Description ... *62*
6.4.5 Per-pixel Metadata Description ... *62*
6.4.6 Grid Data Set Descriptions ... *62*
6.4.7 Per-grid QA Metadata ... *65*
6.5 MISR LEVEL 1B2 MI1B2T AND MB2LMT TERRAIN-PROJECTED PRODUCTS ... 66
6.5.1 File Metadata Description ... *66*
6.5.2 Per-grid Metadata Description ... *67*
6.5.3 Per-block Metadata Description ... *68*
6.5.4 Per-line Metadata Description ... *69*
6.5.5 Per-pixel Metadata Description ... *70*
6.5.6 Grid Data Set Descriptions ... *70*
6.5.7 Per-grid QA Metadata ... *72*
6.6 MISR LEVEL 1B2 MI1B2GEOP GEOMETRIC PARAMETERS PRODUCT ... 74
6.6.1 File Metadata Description ... *74*
6.6.2 Per-grid Metadata Description ... *76*
6.6.3 Per-block Metadata Description ... *76*
6.6.4 Per-line Metadata Description ... *77*
6.6.5 Per-pixel Metadata Description ... *77*
6.6.6 Grid Data Set Descriptions ... *77*
6.6.7 Per-grid QA Metadata ... *80*
6.7 MISR LEVEL 1B2 MI1B2RCCM RCCM PRODUCT ... 80
6.7.1 File Metadata Description ... *80*
6.7.2 Per-grid Metadata Description ... *82*
6.7.3 Per-block Metadata Description ... *82*
6.7.4 Per-line Metadata Description ... *83*
6.7.5 Per-pixel Metadata Description ... *83*
6.7.6 Grid Data Set Descriptions ... *83*
6.7.7 Per-grid QA Metadata ... *85*
6.8 MISR LEVEL 1B2 MISRBR ELLIPSOID PROJECTED BROWSE PRODUCT ... 85
6.9 MISR LEVEL 1B2 MIB2TRPE ELLIPSOID-PROJECTED ... 85
6.9 TRANSFORM PARAMETERS PRODUCT ... 86
6.9.1 File Metadata Description ... *86*
6.9.2 Per-block Metadata Description ... *86*
6.9.3 ICC Per-gridcell Metadata Description ... *87*
6.9.4 SOM-to-New Per-gridcell and Per-band Metadata Description ... *88*
6.10 MISR LEVEL 1B2 MIB2TRPT TERRAIN-PROJECTED ... 88
6.10 TRANSFORM PARAMETERS PRODUCT ... 89
6.10.1 File Metadata Description ... *89*
6.10.2 Per-block Metadata Description ... *89*
6.10.3 ICC Per-gridcell Metadata Description ... *90*
6.10.4 Ref-to-New Per-subgridcell Metadata Description ... *91*
6.10.5 Band-to-Band Per-gridcell and Per-band Metadata Description ... *91*
6.11 MISR LEVEL 1B2 MIB2CORR REGISTRATION CORRECTIONS PRODUCT ... 92
6.11.1 Data Set Description ... *92*

7 MISR LEVEL 2 TOA/CLOUD PRODUCT ... 94

7.1 MISR LEVEL 2 TOA/CLOUD PRODUCT GRANULE NAMES ... 94
7.2 MISR LEVEL 2 TOA/CLOUD PRODUCT GRANULE BRIEF DESCRIPTIONS ... 94
7.3 MISR LEVEL 2 TOA/CLOUD PRODUCT GRANULE DATA SETS ... 94
7.4 DIFFERENCES BETWEEN FIRSTLOOK AND FINAL PROCESSING ... 95
7.5 MISR LEVEL 2 MIL2TCST CLOUD STEREO PRODUCT ... 96
7.5.1 File Metadata Description ... *96*
7.5.2 Per-grid Metadata Description ... *98*

7.5.3 Per-block Metadata Description *98*
7.5.4 Per-line Metadata Description *99*
7.5.5 Per-pixel Metadata Description *99*
7.5.6 Grid Data Set Descriptions *99*
7.5.7 Per-grid QA Metadata *116*
7.6 MISR LEVEL 2 MIL2TCCL CLOUD CLASSIFIER PRODUCT 118
7.6.1 File Metadata Description *118*
7.6.2 Per-grid Metadata Description *119*
7.6.3 Per-block Metadata Description *119*
7.6.4 Per-line Metadata Description *120*
7.6.5 Per-pixel Metadata Description *120*
7.6.6 Grid Data Set Descriptions *120*
7.6.7 Per-grid QA Metadata *127*
7.7 MISR LEVEL 2 MIL2TCAL CLOUD ALBEDO PRODUCT 128
7.7.1 File Metadata Description *128*
7.7.2 Per-grid Metadata Description *129*
7.7.3 Per-block Metadata Description *130*
7.7.4 Per-line Metadata Description *130*
7.7.5 Per-pixel Metadata Description *130*
7.7.6 Grid Data Set Descriptions *131*
7.7.7 Per-grid QA Metadata *137*

8 MISR LEVEL 2 AEROSOL/SURFACE PRODUCT 152

8.1 MISR LEVEL 2 A/S PRODUCT GRANULE NAMES 152
8.2 MISR LEVEL 2 A/S PRODUCT GRANULE BRIEF DESCRIPTIONS 152
8.3 MISR LEVEL 2 A/S PRODUCT GRANULE DATA SETS 153
8.4 DIFFERENCES BETWEEN FIRSTLOOK AND FINAL PROCESSING 154
8.5 MISR LEVEL 2 MIL2ASAE AEROSOL PRODUCT 155
8.5.1 File Metadata Description *155*
8.5.2 Vdata Description *156*
8.5.3 Per-grid Metadata Description *160*
8.5.4 Per-block Metadata Description *160*
8.5.5 Per-line Metadata Description *161*
8.5.6 Per-pixel Metadata Description *161*
8.5.7 Grid Data Set Descriptions *161*
8.5.8 Per-grid QA Metadata *177*
8.6 MISR LEVEL 2 MIL2ASLS LAND SURFACE PRODUCT 181
8.6.1 File Metadata Description *181*
8.6.2 Vdata Description *182*
8.6.3 Per-grid Metadata Description *183*
8.6.4 Per-block Metadata Description *186*
8.6.5 Per-line Metadata Description *186*
8.6.6 Per-pixel Metadata Description *187*
8.6.7 Grid Data Set Descriptions *187*
8.6.8 Per-grid QA Metadata *194*
8.7 MISR LEVEL 2 MIL2ASOS OCEAN SURFACE PRODUCT 196
8.7.1 File Metadata Description *196*
8.7.2 Per-grid Metadata Description *197*
8.7.3 Per-block Metadata Description *197*
8.7.4 Per-line Metadata Description *198*
8.7.5 Per-pixel Metadata Description *198*
8.7.6 Grid Data Set Descriptions *198*
8.7.7 Per-grid QA Metadata *200*

9 MISR ANCILLARY PRODUCTS 202

9.1 MISR ANCILLARY PRODUCT GRANULE NAMES 202

9.2 MISR ANCILLARY PRODUCT GRANULE BRIEF DESCRIPTIONS 202
9.2.1 MISR Ancillary MIANCAGP Geographic Product 202
9.2.2 MISR Ancillary MIANCARP Pre-Flight Characterization Product 203
9.2.3 MISR Ancillary MIANCARP Pre-Flight Calibration Product 203
9.2.4 MISR Ancillary MIANCARP In-Flight Calibration Product 203
9.2.5 MISR Ancillary MIANCARP Configuration Product 203
9.2.6 MISR Ancillary MIANCACP APOP Product 203
9.2.7 MISR Ancillary MIANCACP Aerosol Mixture Product 204
9.2.8 MISR Ancillary MIANCACP Climatological Likelihood Product 204
9.2.9 MISR Terrestrial Atmosphere and Surface Climatology Product 204
9.3 MISR ANCILLARY PRODUCT GRANULE DATA SETS 204
9.3.1 MISR Ancillary MIANCAGP Geographic Product 204
9.3.2 MISR Ancillary MIANCARP Pre-Flight Characterization Product 205
9.3.3 MISR Ancillary MIANCARP Pre-Flight Calibration Product 205
9.3.4 MISR Ancillary MIANCARP In-Flight Calibration Product 205
9.3.5 MISR Ancillary MIANCARP Configuration Product 205
9.3.6 MISR Ancillary MIANCACP APOP Product 205
9.3.7 MISR Ancillary MIANCACP MIXTURE Product 205
9.3.8 MISR Ancillary MIANCACP CLIMLIKELY Product 205
9.3.9 MISR Terrestrial Atmosphere and Surface Climatology Product 205
9.4 MISR ANCILLARY MIANCAGP GEOGRAPHIC PRODUCT 206
9.4.1 File Metadata Description 206
9.4.2 Per-grid Metadata Description 207
9.4.3 Per-block Metadata Description 207
9.4.4 Grid Data Set Descriptions 208
9.5 MISR ANCILLARY MIANCARP PRFLTCHAR PRODUCT 209
9.5.1 File Metadata Description 209
9.5.2 Per-SDS Metadata Description 210
9.5.3 Per-block Metadata Description 210
9.5.4 Scientific Data Set Descriptions 210
9.6 MISR ANCILLARY MIANCARP PRFLTCAL PRODUCT 212
9.6.1 File Metadata Description 212
9.6.2 Per-SDS Metadata Description 212
9.6.3 Per-block Metadata Description 212
9.6.4 Scientific Data Set Descriptions 213
9.7 MISR ANCILLARY MIANCARP INFLTCAL PRODUCT 214
9.7.1 File Metadata Description 214
9.7.2 Per-SDS Metadata Description 214
9.7.3 Per-block Metadata Description 214
9.7.4 Scientific Data Set Descriptions 214
9.8 MISR ANCILLARY MIANCARP CONFIG PRODUCT 216
9.8.1 File Metadata Description 216
9.8.2 Per-grid Metadata Description 216
9.8.3 Per-block Metadata Description 216
9.8.4 Scientific Data Set Descriptions 216
9.9 MISR ANCILLARY MIANCACP APOP PRODUCT 218
9.9.1 File Metadata Description 218
9.9.2 Per-grid Metadata Description 218
9.9.3 Per-block Metadata Description 218
9.9.4 Vdata Set Descriptions 218
9.9.4.1 APOP Vdata fill values 218
9.9.4.2 APOP Vdata parameters 219
9.9.4.2.1 Data Table 219
9.9.4.2.2 Bands. 220
9.9.4.2.3 Particle Classification Indices. 220
9.9.4.2.4 Scattering Angles. 220

9.9.5 Scientific Data Set Descriptions *220*
9.10 MISR ANCILLARY MIANCACP MIXTURE PRODUCT 221
9.10.1 File Metadata Description *221*
9.10.2 Per-grid Metadata Description *222*
9.10.3 Per-block Metadata Description *222*
9.10.4 Vdata Set Descriptions *222*
9.10.4.1 Mixture Vdata fill values 222
9.10.4.2 Mixture Vdata parameters 222
9.10.4.2.1 Mixture Data. 222
9.10.4.2.2 Component Model Legend. 223
9.10.4.2.3 Bands. 223
9.10.4.2.4 Mixture Classification Indices. 223
9.10.4.2.5 Retrieval Path Indices. 223
9.10.4.2.6 Retrieval Path Applicability Flag Legend 224
9.10.5 Scientific Data Set Descriptions *224*
9.11 MISR ANCILLARY MIANCACP CLIM-LIKELY PRODUCT 224
9.11.1 File Metadata Description *224*
9.11.2 Per-grid Metadata Description *224*
9.11.3 Per-block Metadata Description *225*
9.11.4 Vdata Set Descriptions *225*
9.11.5 Scientific Data Set Descriptions *225*
9.12 MISR ANCILLARY MIANTASC PRODUCT 225
9.12.1 File Metadata Description *225*
9.12.2 Per-grid Metadata Description *225*
9.12.3 Per-block Metadata Description *225*
9.12.4 Grid Data Set Descriptions *225*

10 MISR LEVEL 3 HDFEOS PRODUCTS 228

10.1 MISR LEVEL 3 HDFEOS PRODUCT GRANULE NAMES 228
10.2 MISR LEVEL 3 HDFEOS PRODUCT GRANULE BRIEF DESCRIPTIONS 229
10.3 MISR LEVEL 3 HDFEOS PRODUCT GRANULE DATA SETS 229
10.4 DIFFERENCES BETWEEN FIRSTLOOK AND FINAL PROCESSING 231
10.5 MISR LEVEL 3 MIL3DRD, MIL3MRD, MIL3QRD, MIL3YRD COMPONENT GLOBAL GEORECTIFIED PRODUCT 232
10.5.1 File Metadata Description *232*
10.5.2 File Dimensions *233*
10.5.3 Grid Dataset Description *233*
10.6 MISR LEVEL 3 MIL3DAE, MIL3MAE, MIL3QAE, MIL3YAE COMPONENT GLOBAL AEROSOL PRODUCT 234
10.6.1 File Metadata Description *234*
10.6.2 File Dimensions *235*
10.6.3 Grid Dataset Description *236*
10.7 MISR LEVEL 3 MIL3DLS, MIL3MLS, MIL3QLS, MIL3YLS COMPONENT GLOBAL LAND/SURFACE PRODUCT 237
10.7.1 File Metadata Description *237*
10.7.2 File Dimensions *239*
10.7.3 Grid Dataset Description *239*
10.8 MISR LEVEL 3 MIL3DAL, MIL3MAL, MIL3QAL, MIL3YAL COMPONENT GLOBAL ALBEDO PRODUCT 240
10.8.1 File Metadata Description *240*
10.8.2 File Dimensions *241*
10.8.3 Grid Dataset Description *242*
10.8.4 SDS Dataset Description *244*
10.9 MISR LEVEL 3 MIL3DCLD, MIL3MCLD, MIL3QCLD, MIL3YCLD COMPONENT GLOBAL CLOUD PRODUCT 246
10.9.1 File Metadata Description *246*
10.9.2 File Dimensions *247*

10.9.3 Grid Dataset Description *248*
10.10 MISR LEVEL 3 MIL3DCFA, MIL3MCFA, MIL3QCFA, MIL3YCFA CLOUD FRACTION BY ALTITUDE PRODUCT 249
10.10.1 File Metadata Description *249*
10.10.2 File Dimensions *249*
10.10.3 Grid Dataset Description *250*

11 MISR LEVEL 3 NETCDF PRODUCTS 252

11.1 INTRODUCTION 252
11.2 MISR LEVEL 3 NETCDF COMPONENT PRODUCT 252
11.2.1 MISR LEVEL 3 NETCDF COMPONENT PRODUCT GRANULE NAMES *252*
11.2.2 MISR LEVEL 3 NETCDF COMPONENT PRODUCT GRANULE *253*
11.2.2 BRIEF DESCRIPTIONS *254*
11.2.3 MISR LEVEL 3 NETCDF COMPONENT PRODUCT GRANULE DATA SETS *254*
11.2.4 DIFFERENCES BETWEEN FIRSTLOOK AND FINAL PROCESSING *254*
11.2.5 MISR LEVEL 3 MIL3DRDN, MIL3MRDN, MIL3QRDN, MIL3YRDN COMPONENT GLOBAL GEORECTIFIED netCDF PRODUCT *257*
11.2.5.1 CGGRP Metadata Variables 257
11.2.5.2 CGGRP Labeled Dimension Variables 259
11.2.5.3 CGGRP_0_5_DEG Geographic Grid Variables 259
11.2.5.4 CGGRP_1_DEG Geographic Grid Variables 260
11.2.5.5 CGGRP_0_5_DEG Global Attributes 261
11.2.5.6 CGGRP_1_DEG Global Attributes 261
11.2.6 MISR LEVEL 3 MIL3DAEN, MIL3MAEN, MIL3QAEN, MIL3YAEN COMPONENT GLOBAL AEROSOL netCDF PRODUCT *261*
11.2.6.1 CGAS Metadata Variables 261
11.2.6.2 CGAS Labeled Dimension Variables 262
11.2.6.3 CGAS_0_5_DEG Geographic Grid Variables 264
11.2.6.4 CGAS_0_5_DEG Global Attributes 265
11.2.7 MISR LEVEL 3 MIL3DLSN, MIL3MLSN, MIL3QLSN, MIL3YLSN COMPONENT GLOBAL LAND/SURFACE netCDF PRODUCT *266*
11.2.7.1 CGLS Metadata Variables 266
11.2.7.2 CGLS Labeled Dimension Variables 268
11.2.7.3 CGLS_0_5_DEG Geographic Grid Variables 268
11.2.7.4 CGLS_0_5_DEG Global Attributes 270
11.2.8 MISR LEVEL 3 MIL3DALN, MIL3MALN, MIL3QALN, MIL3YALN COMPONENT GLOBAL ALBEDO netCDF PRODUCT *272*
11.2.8.1 CGAL Metadata Variables 272
11.2.8.2 CGAL Labeled Dimension Variables 273
11.2.8.3 CGAL_1_DEG Geographic Grid Variables 274
11.2.8.4 CGAL_5_DEG Geographic Grid Variables 278
11.2.8.5 CGAL_1_DEG Global Attributes 283
11.2.8.6 CGAL_5_DEG Global Attributes 284
11.2.9 MISR LEVEL 3 MI3DCLDN, MI3MCLDN, MI3QCLDN, MI3YCLDN COMPONENT GLOBAL CLOUD netCDF PRODUCT *285*
11.2.9.1 CGCL Metadata Variables 285
11.2.9.2 CGCL Labeled Dimension Variables 287
11.2.9.3 CGCL_0_5_DEG Geographic Grid Variables 287
11.2.9.4 CGCL_2_5_DEG Geographic Grid Variables 288
11.2.9.5 CGCL_0_5_DEG Global Attributes 290
11.2.9.6 CGCL_2_5_DEG Global Attributes 291
11.3 MISR LEVEL 3 NETCDF CMV PRODUCT 293
11.3.1 MISR LEVEL 3 NETCDF CMV PRODUCT GRANULE NAMES *293*
11.3.1 MISR LEVEL 3 NETCDF CMV PRODUCT GRANULE BRIEF DESCRIPTIONS *293*
11.3.2 MISR LEVEL 3 NETCDF CMV PRODUCT GLOBAL ATTRIBUTES *293*
11.3.3 MISR Level 3 netCDF CMV Product Variables *294*

APPENDIX A: MISR GEOREGISTRATION INFO 297

A.1 INTRODUCTION 297
A.2 BACKGROUND: THE INSTRUMENT 297
A.3 BACKGROUND: THE SOM PROJECTION 299
A.4 BACKGROUND: HDF-EOS 302
A.5 COORDINATE CONVERSIONS 305
A.5.1 SOM <-> Lat/Lon 305
A.5.2 Inverse: MISR(block, line, sample) -> SOM(X,Y) 306
A.5.3 Forward: SOM(X,Y) -> MISR (block, line, sample) 307
A.6 METADATA DETAILS 308
A.7 EXAMPLE FUNCTION CALLS 309
A.7.1 misrcoordex.c 310
A.7.2 misr_init.c 316
A.7.3 misrfor.c 317
A.7.4 misrinv.c 319
A.7.5 misrproj.h 320
A.7.6 errormacros.h 320
A.7.7 Makefile 321
A.8 APPENDIX A BIBLIOGRAPHY 321

Acronym List

ASDC.....Atmoshperic Sciences Data Center (see LaRC DAAC)
AU.....Astronomical Unit
BHR .....Bihemispherical Reflectance
BRF .....Bidirectional Reflectance Factor
DAAC .....Distributed Active Archive Center
DHR .....Directional Hemispherical Reflectance
DHRPAR .....DHR integrated over Photosynthetically Active Radiation band.
ECS .....EOSDIS Core System (Data Production System at DAAC)
EOS .....Earth Observing System
EOSDIS.....Earth Observing System Data and Information System
ESDT.....Earth Science Datatype
FPAR .....Fraction of Photosynthetically-Active Radiation
GDQI.....Geometric Data Quality Indicator
HDRF .....Hemispherical-Directional Reflectance Factor
JPL .....Jet Propulsion Laboratory
LAI.....Leaf Area Index
LaRC DAAC.....NASA Langley Reserach Center DAAC
NASA.....National Aeronautics and Space Administration
NDVI.....Normalized Difference Vegetation Index
SCF .....Science Computing Facility
SDP .....Science Data Processing
SMART.....Simulated MISR Ancillary Radiative Transfer
SOM.....Space-Oblique Mercator
TOA .....Top-Of-Atmosphere
TOAC.....Tropical Ocean Atmospheric Correction
WGS84.....World Geodetic System 1984

1 MISR DATA PRODUCT SPECIFICATION DOCUMENT

1.1 OVERVIEW

The Multi-angle Imaging SpectroRadiometer (MISR) project is a component of the Earth Observing System (EOS) Terra Mission and the EOS Data Information System (EOSDIS), which in themselves are components of the National Aeronautics and Space Administration's (NASA) Earth Science Enterprise. An integral part of the MISR project is Scientific Data Processing (SDP) of the observations coming from the MISR instrument on-board the EOS-TERRA satellite.

MISR SDP exists to produce science and supporting data products from MISR instrument data. All functions of the MISR SDP system are directed toward this goal. MISR SDP does not operate as an independent entity, but rather is linked to the functionality of the EOSDIS at the Langley Research Center (LaRC) Distributed Active Archive Center (DAAC). The ECS ingest subsystem at the LaRC DAAC is the agent for receiving and organizing all of the input data needed by MISR SDP. These data are then made available to MISR SDP through the data server and staging facilities provided by ECS (EOSDIS Core System) at the LaRC DAAC. After MISR standard data processing is complete, the standard output products are archived through the EOSDIS data server and made available to users through ECS client services.

The MISR Science Computing Facility (SCF) at the Jet Propulsion Laboratory (JPL) supports the development of MISR science algorithms and software, instrument calibration and performance assessment, as well as providing quality assessment and data validation services with respect to MISR SDP. The MISR SCF produces software, supporting data, and coefficients that are required to operate MISR SDP software at the LaRC DAAC.

MISR SDP processing depends upon the availability of MISR instrument data, internal data sets produced by the MISR SCF, and external data sets that are products of other EOS data processing systems. The main purpose of this document is to describe MISR standard output products of the EOSDIS, as well as required internal and external data sets that are critical to MISR SDP. This document is not meant to be the definitive description of the external data sets that are products of other EOS data processing systems and utilized by MISR SDP. Rather, it only describes the external data sets that MISR requires for its processing. The full range of internal data sets produced at the MISR Science Computing Facility (SCF) are not described in this document either, except for the three internal data sets that are produced as ancillary products and included in the MISR standard output products. For details of the other internal data sets, see the MISR Software Interface Specification (SIS) document for internal interfaces and the Data Management Plan (DMP), which describes MISR SCF activities in regard to archiving data at the MISR SCF.

1.2 SCOPE OF MISR DPS DOCUMENT

The input data sets that are generated internally within the MISR project and the external data sets from outside the MISR project that are critical to MISR SDP are first described in section 2. This section clearly highlights MISR SDP dependencies on data sets generated externally to the MISR project. The final outputs of MISR SDP are surface, aerosol, and cloud data products based on the MISR EOS-TERRA observations, together with three supporting ancillary data products that aid in

the interpretation of the geophysical data sets.

In section 3 the of the DPS document the general file structure of all MISR SDP geophysical and ancillary data products is described. In particular, MISR SDP dependence on both HDF-EOS swath and grid formats is discussed, together with the HDF and HDF-EOS structures that MISR SDP uses to store metadata. The file formats of each MISR geophysical and ancillary data product are then explained in detail, including the

MISR LEVEL 1A REFORMATTED ANNOTATED PRODUCT (section 4),
MISR LEVEL 1B1 RADIOMETRIC PRODUCT (section 5),
MISR LEVEL 1B2 GEORECTIFIED RADIANCE PRODUCT (section 6) ,
MISR LEVEL 2 TOA/CLOUD PRODUCT (section 7),
MISR LEVEL 2 AEROSOL/SURFACE PRODUCT (section 8),
MISR ANCILLARY GEOGRAPHIC PRODUCT (section 9),
MISR ANCILLARY RADIOMETRIC PRODUCT (section 9),
MISR ANCILLARY AEROSOL CLIMATOLOGY PRODUCT (section 9).
MISR COMPONENT GLOBAL GEORECTIFIED PRODUCT (section 10).
MISR COMPONENT GLOBAL AEROSOL PRODUCT (section 10).
MISR COMPONENT GLOBAL LAND/SURFACE PRODUCT (section 10).
MISR COMPONENT GLOBAL ALBEDO PRODUCT (section 10)
MISR COMPONENT GLOBAL CLOUD PRODUCT (section 10)

The three ancillary products described in section 9 are actually produced at the MISR SCF, but they are archived at the LaRC DAAC because these products are needed to fully understand and interpret the MISR SDP standard output products.

Appendix [A] contains a description of a method for obtaining the latitude and longitude of a MISR pixel. Since most MISR data products are registered to the SOM map projection, it is important to understand the conversions in the Appendix in order to compare MISR products to data from other sources.

1.3 CONTROLLING DOCUMENTS

1) MISR Science Data Processing Functional Requirements Document, (FRD) JPL D-12417, September 1996 (or latest version).
2) MISR Experiment Implementation Plan, Volume III, Science, Data Processing, and Instrument Operations, Technical and Management Plan (EIP), JPL D-11520, 24 January 1996 (or latest version).
3) MISR Science Data System Software Management Plan (SMP), JPL D-11641, February 1996 (or latest version).
4) SDPIO Implementation Handbook, JPL D-16392, January 1999 (or latest version).
5) MISR Data System Science Requirements, JPL D-11398, September 1996 (or latest version).
6) MISR Level 1 Radiance Scaling and Conditioning Algorithm Theoretical Basis, JPL D-11507,

Revision D, January 1999 (or latest version).

7) MISR Level 1 Georectification and Registration Algorithm Theoretical Basis, JPL D-11532, Revision B, August 1996 (or latest version).
8) MISR Level 1 Cloud Detection Algorithm Theoretical Basis, JPL D-13397, Revision A, November 1997 (or latest version).
9) MISR Level 1 In-flight Radiometric Calibration and Characterization Algorithm Theoretical Basis, JPL D-13398, June 1996 (or latest version).
10) MISR Level 1 Ancillary Geographic Product Algorithm Theoretical Basis, JPL D-13400, Revision B, March 1999 (or latest version).
11) MISR Level 2 Top-of-Atmosphere Albedo Algorithm Theoretical Basis, JPL D-13401, Revision C, December 1997 (or latest version).
12) MISR Level 2 Aerosol Retrieval Algorithm Theoretical Basis, JPL D-11400, Revision G. March 2008 (or latest version).
13) MISR Level 2 Surface Retrieval Algorithm Theoretical Basis, JPL D-11401, Revision C, December 1997 (or latest version).
14) MISR Level 2 Ancillary Products and Datasets Algorithm Theoretical Basis, JPL D-13402., Revision A, December 1998 (or latest version).
15) MISR Level 3 Global Products Algorithm Theoretical Basis, JPL D-14190, June 2000 (or latest version).
16) MISR Science Data Quality Indicators, JPL D-13496, January 1997 (or latest version).
17) Data Production Software and Science Computing Facility (SCF) Standards and Guidelines, GSFC EOSDIS document 423-16-01
18) MISR Science Data Processing Quality Assessment Plan, JPL D-13965, 17 January 1997 (or latest version).
19) MISR Level 3 Cloud Fraction by Altitude Algorithm Theoretical Basis, JPL D-62358, September 10, 2010 (or latest version)
20) MISR Level 3 Cloud Motion Vector Product Algorithm Theoretical Basis, JPL D-64973, September 10, 2010 (or latest version)

1.4 APPLICABLE DOCUMENTS

19) Science User's Guide and Operations Procedure Handbook for the ECS Project, HAIS 193-205-SE1-001 (or latest version).
20) Interface Requirements Document Between EOSDIS Core System (ECS) and Science Computing Facilities, HAIS 209-CD-005-005, March 1996 (or latest version).
21) EOSDIS Core System Science Information Architecture, HAIS working paper FB9401V2 (or latest version).
22) Software Implementation Guidelines, JPL D-10622 (or latest version).
23) MISR Science Data System Error Policy, JPL D-13137 (or latest version).

24) Statement of Work for the Multi-Angle Imaging SpectroRadiometer (MISR), GSFC 421- 12-13-03 (or latest version).
25) MISR Mission Operations Concepts and Requirements, JPL D-11594 (or latest version).
26) SDP Toolkit Users Guide for the ECS Project, HAIS 194-809-SD4-001 (or latest version).

2 MISR SCIENCE DATA PROCESSING

2.1 OVERVIEW

Multi-angle Imaging SpectroRadiometer (MISR) science data processing (SDP) at the Langley Research Center (LaRC) Distributed Active Archive Center (DAAC) requires data sets generated internally by the MISR Science Computing Facility (SCF), as well as external data sets generated outside of the MISR project. The internal data sets generated by the MISR SCF are called ancillary data sets.

The data sets that are required by the MISR SCF in order to produce the internal data sets required by MISR SDP at the LaRC DAAC are discussed in section 2.2.1, while the internal data sets actually generated at the MISR SCF are listed in section 2.2.2. Both MISR SCF generated internal data sets and external data sets (section 2.3) are required in MISR SDP at the LaRC DAAC. MISR SDP at the LaRC DAAC operates on the internal and external data sets to produce the MISR project standard science data products (section 2.4).

2.2 MISR SDP: ANCILLARY DATA SET GENERATION

The required data sets to MISR SCF generation of the internal data sets are illustrated in Table 2-1. The internal data sets generated by MISR SCF processing (Table 2-2) are archived at the MISR SCF, sent to the LaRC DAAC to be archived, and then used as inputs to MISR SDP at the LaRC DAAC. Henceforth, we call these internal data sets generated by the MISR SCF Ancillary Data Sets and Products.

NOTE: Since the beginning of the MISR mission, MISR SDP at the LaRC DAAC has only used a subset of Ancillary Data Sets derived at the MISR SCF. External inputs may be incorporated at some future date.

2.2.1 MISR SDP Ancillary Data Set Dependencies

Table 2-1: MISR SDP Ancillary Data Set Dependencies

Input Data Sets Required for MISR SDP
Spacecraft Ancillary Data
Predicted Spacecraft Orbit
Preflight DataBRDF Cloud Threshold Models
ISCCP Climatologies
Radiometric Calibration Reference Imagery
Geometric Calibration Reference Imagery
Coastline Reference Maps
Global Digital Elevation Model

SAGE Climatology Record
TOMS Climatology Record
Flight and Ground Cross Comparisons
Solar Irradiance Model
Earth-Sun Ephemeris
Aerosol Models
NSIDC Snow-Ice cover
DAO Atmospheric Data
AVIRIS Reference Imagery
Global Aerosol Climatologies

2.2.2 MISR SDP Ancillary Data Sets

= Not yet implemented

Table 2-2: MISR SDP Ancillary Data Sets

Product	ESDTs	File Description
Ancillary Radiometric Product	MIANCARP	ARP
Radiometric Camera-by-camera Cloud Thresholds	MIANRCCT	RCCM Thresholds
Cloud Screening Surface Classification Dataset	MIANCSSC	CSSC
Ancillary Geographic Product	MIANCAGP	AGP
Camera Geometric Model	MISANCGM	CGM
Projection Parameters	MIANPP	PP
Reference Orbit Imagery	MIRFOI	ROI
Angular Signature Cloud Mask Thresholds Dataset	MIL2TCCT	ASCM Thresholds
Terrestrial Atmosphere and Surface Climatology Dataset	MIANTASC	TASC
Albedo Azimuth Modeling Dataset	MIANAZM	AZM
Albedo CERES Angular Distribution Models	MIANCRAL	ADMCERES
Ancillary Land Biome Dataset	MIANLDBM	Land Biome Dataset
SMART Dataset	MIANSMT	SMART
Aerosol Climatology Product	MIANACP	ACP
Tropical Ocean Atmosphere Correction Dataset	MIANTOAC	TOAC

2.3 MISR SDP: EXTERNAL DATA SET DEPENDENCIES

MISR SDP at the LaRC DAAC does not yet make use of the ancillary data sets listed in Table 2-3 below.

Table 2-3: MISR SDP External Data Set Dependencies

External Data Sets Required for MISR SDP
DAO Atmospheric Data
MODIS Column Water Vapor Amount
MODIS Snow and Ice Cover
NSIDC Near real-time Ice and Snow Extent
NSCAT Surface Wind Speed
MODIS Cloud Top Height
MODIS Cloud Phase
MODIS Cloud Mask
SAGE Stratosphere Aerosol Optical Depth
Earth-Sun Ephemeris
Spacecraft Ancillary Data

Since these external data sets are unavailable to MISR SDP at the LaRC DAAC, the ancillary data from the MISR TASC file is used instead. External inputs may be incorporated at some future date. The important geophysical parameters extracted from the data sets above are listed in Table 2-4 below.

Table 2-4: MISR SDP External Geophysical Parameter Dependencies

Geophysical Parameter	Data Source
Cloud Phase (Liquid/Ice)	MODIS Cloud Phase Properties
	DAO cloud phase or temperature profile or geopotential height
	MISR SCF TASC dataset
Cloud Top Height	MODIS Cloud Mask
High Cloud Top Altitude	MISR SCF TASC dataset
Stratosphere Aerosol Optical Depth	SAGE III
Surface Wind Speed	DAO surface wind speed
	MISR SCF TASC dataset
Surface Pressure	DAO surface pressure
	MISR SCF TASC dataset
Relative Humidity	MODIS temperature/moisture profiles or precipitable water
	DAO relative humidity vs. pressure or geopotential height
	MISR SCF TASC dataset (relative humidity in boundary layer)

Snow/Ice Cover	MODIS L2 daily snow/ice
	NSIDC weekly snow/ice
	MISR SCF TASC dataset
Ozone Optical Depth	MODIS total column ozone
	DAO ozone profile vs. pressure
	MISR SCF TASC dataset (ozone column abundance)
Tropopause Height	DAO tropopause pressure or geopotential height array
	MISR SCF TASC dataset

2.4 MISR SDP: STANDARD SCIENCE DATA PRODUCTS

The end result of MISR SDP at the LaRC DAAC are the MISR project standard science data products listed in Table [2-5] below. This document describes the product versions indicated in the final column.

= Not yet implemented

Table 2-5: MISR Project Standard Science Data Products

Product	ESDTs	File Description	File Type	Applicable Product Version
Level 1A Reformatted Annotated Product	MIL1A	L1A CCD Science	HDF-EOS Swath	F02_0016, F02_0017, F02_0018, F02_0019, F02_0020, F03_0022, F03_0023, F03_0024
		L1A Browse Removed Sep, 2001		
	MI1AENG1	L1A Engineering	HDF-EOS Swath	F01_0006, F01_0007, F02_0008
	MI1ANAV	L1A Navigation	HDF-EOS Swath	0006, 0007, 0008
	MI1AMOT	L1A Motor	HDF-EOS Swath	F01_0005, F01_0006, F01_0007
	MI1AC	L1A CCD Calibration	HDF-EOS Swath	F01_0006, F01_0007, F01_0008

	MI1AOBC	L1A OBC data	HDF-EOS Swath	F01_0005, F01_0006, F01_0007
Level 1B1 Radiometric Product	MI1B1	L1B1 Global Mode	HDF-EOS Swath	F02_0020, F03_0022, F03_0023 F03_0024
	MI1B1LM	L1B1 Local Mode	HDF-EOS Swath	F02_0016, F02_0017, F02_0018, F02_0019, F02_0020, F03_0022, F03_0023 F03_0024
Level 1B2 Georectified Radiance Product	MI1B2T	L1B2 Terrain	HDF-EOS Stacked-Block Grid	F02_0020, F03_0022, F03_0023 F03_0024
	MI1B2E	L1B2 Ellipsoid	HDF-EOS Stacked-Block Grid	F02_0020, F03_0022, F03_0023 F03_0024
	MISBR	PGE 1 Ellipsoid Browse	JPEG	F02_0020, F03_0022, F03_0023 F03_0024
	MIRCCM	RCCM	HDF-EOS Stacked-Block Grid	F04_0023 F04_0024
	MIB2LMT	L1B2 Terr. Local Mode	HDF-EOS Stacked-Block Grid	F02_0019, F02_0020, F03_0022, F03_0023 F03_0024
	MIB2LME	L1B2 Ellip. Local Mode	HDF-EOS Stacked-Block Grid	F02_0019, F02_0020, F03_0022, F03_0023 F03_0024
	MIB2GEOP	Geometric Parameters	HDF-EOS Stacked-Block Grid	F03_0010-13
	MIANRCCH	RCCM histogram updates	HDF Vdatas	F03_0022, F03_0023 F03_0024
Level 2 TOA/Cloud Product	MIL2TCST	L2TC Stereo	HDF-EOS Stacked-Block Grid	F08_0017
	MIL2TCCL	L2TC Cloud Mask/ Cloud Classifiers	HDF-EOS Stacked-Block Grid	F06_0011
	MIL2TCCH	ASCM Histogram Updates	HDF Vdatas	F06_0011
	MIL2TCAL	L2TC Albedo	HDF-EOS Stacked-	F05_0011

			Block Grid	
	MISBR	L2TC Browse	JPEG	
Level 2 Aerosol/ Surface Product	MIL2ASOS	L2AS Ocean Surface	HDF-EOS Stacked-Block Grid	
	MIL2ASLS	L2AS Land Surface	HDF-EOS Stacked-Block Grid	F06_0017, F06_0018
	MIL2ASAE	L2AS Aerosol	HDF-EOS Stacked-Block Grid	F09_0017, F09_0018
	MISBR	L2AS Browse	JPEG	
Level 3 Component Global Georectified Product	MIL3DRD MIL3MRD MIL3QRD MIL3YRD	L3 Radiance	HDF-EOS Geographic Grid	F02_0007, F02_0009, F02_0011, F02_0013, F02_0015, F02_0017, F02_0019 F02_0021 F02_0023 F04_0025
Level 3 Component Global Albedo Product	MIL3DAL MIL3MAL MIL3QAL MIL3YAL	L3 Albedo	HDF-EOS Geographic Grid	F06_0012, F06_0014 F06_0016 F06_0018 F06_0020 F06_0024
	MIL3DALN MIL3MALN MIL3QALN MIL3YALN		NetCDF	F02_0020 F04_0022 F04_0024
Level 3 Component Global Cloud Product	MIL3DCLD MIL3MCLD MIL3QCLD MIL3YCLD	L3 Cloud	HDF-EOS Geographic Grid	F02_0014 F02_0016 F02_0018 F02_0020 F02_0022 F02_0024
	MIL3DCLDN MIL3MCLDN MIL3QCLDN MIL3YCLDN		NetCDF	F04_0024
Level 3 Component Global Aerosol Product	MIL3DAE MIL3MAE MIL3QAE MIL3YAE	L3 Aerosol	HDF-EOS Geographic Grid	F06_0016 F06_0017 F06_0019 F11_0027 F13_0029 F15_0031
	MIL3DAEN MIL3MAEN MIL3QAEN		NetCDF	F02_0025 F04_0027 F06_0029

	MIL3YAEN			F08_0031
Level 3 Component Global Land/Surface Product	MIL3DLS MIL3MLS MIL3QLS MIL3YLS MIL3DLSN MIL3MLSN MIL3QLSN MIL3YLSN	L3 Land/Surface	HDF-EOS Geographic Grid NetCDF	F04_0016 F04_0017 F04_0019 F04_0021 F04_0023 F04_0025 F04_0027 F04_0029 F04_0031 F02_0025 F04_0027 F04_0029 F04_0031
Level 3 Cloud Fraction by Altitude	MIL3DCFA MIL3MCFA MIL3QCFA MIL3YCFA	L3 Cloud	HDF-EOS Geographic Grid	F01_0001
Level 3 Cloud Motion Vector	MI3MCMVN MI3QCMVN MI3YCMVN	L3 Cloud	NetCDF	F01_0001
Ancillary Products		Radiometric Product	NCSA-Supplied HDF Objects	N/A
		Climatology Product	NCSA-Supplied HDF Objects	N/A

3 MISR PRODUCTS: FILE FORMAT OVERVIEW

3.1 HDF AND HDF-EOS FILE STRUCTURES

This section describes the specifications for the MISR products that will be archived at the NASA LaRC DAAC. The MISR files (with one exception as noted below) are implemented in the Hierarchical Data Format (HDF). Most, but not all, of the MISR standard data products are in one of two file formats: HDF-EOS Swath or HDF-EOS Grid, which are extensions of the original HDF as developed by the National Center for Supercomputing Applications (NCSA). The HDF-EOS file interfaces were developed by the EOS Core System (ECS) developers. Standard NCSA HDF terminology, as well as the EOS developed interface terminology, are used in this document when describing these files.

The HDF-EOS data products used by MISR (Swath and Grid) have been defined within the HDF framework and are supported by special application programming interfaces (API) which aid the data producer and user in writing to and reading from these files. These APIs allow data products to be created and manipulated in ways appropriate to each datatype, without regard to the actual HDF objects and conventions underlying them. MISR Swath products are composed of the data acquired on the illuminated portion of the Earth along one given orbit pass. Most MISR Grid products contain data covering the same geographic range as the Swath products. In these cases, the Grid format allows the data to be represented in a map-projected fashion. The map-projected format is necessary because MISR data analysis schemes often involve the comparison of data acquired from different cameras. Such comparisons require data sets to be co-registered, and projecting the data is the most efficient way to represent co-registration. There are other cases, in which the HDF-EOS Grid format is used to display data on a global map grid instead of focusing on a narrow "swath area". MISR Level 3 products are examples of the global use of the HDF-EOS Grid format.

The file specifications given here are in terms of the logical implementation of MISR standard data products in HDF and do not describe the actual physical layout of the files, although there is an attempt to show what the physical layout of a file looks like. The same data object may exist in different relative locations for two iterations of a product file. The locations are determined by HDF on a file-by-file basis and are not important to actually accessing the data using API calls.

3.2 MISR PRODUCTS: DATA FORMATS

Of all of the MISR standard science data products, only the MISR Ancillary Radiometric Product and Aerosol Climatology Product files use standard NCSA-supplied HDF file structures. The MISR Level 1A Reformatted Annotated Product and Level 1B1 Radiometric Product data use the HDF-EOS Swath file type. The HDF-EOS Swath interface is designed to support time-ordered data, such as satellite swaths with time-ordered series of scanlines or time-ordered series of profiles.

The MISR Level 3 products are HDF-EOS Grid files, using a geographic projection.

The remaining MISR products are HDF-EOS Grid files. The HDF-EOS Grid interface was originally intended for storing Level 3 and above products, that is, products which have been "gridded" to

a single Earth-based map projection. The storage of map projection parameters are part of the format, and routines to access the data in Grid format by geolocation are supplied in the Grid API. MISR stores "swath-like" products at Level 1B2 and Level 2 in a space-based map projection. In particular, MISR SDP breaks up L1B2 and L2 swaths into equal-sized blocks. The term "block" refers to a pre-defined, static, fixed-size, rectangular SOM region on the Earth which a) is wide enough to contain the horizontal overlap of all 9 MISR camera views at low latitudes, b) is the geographic unit over which MISR SDP is attempted and c) is the standard unit of MISR data access. The block construct enables the co-registration of 9 different images with a minimal waste of space and processing effort. Changes were made to the HDF-EOS Grid implementation, specific to MISR SDP needs, to handle these blocks as an additional dimension to a Grid dataset. This implementation is referred to as the "Stacked-block" Grid implementation. The user is referred to Appendix [A] where complete details surrounding Stacked-block grid data access may be found.

In brief, the solution to meet MISR's needs for its Level 1B2 and Level 2 data products is to "stack" all of the blocks of an orbit into a single dataset, where the "third" dimension for the dataset becomes the block number (Figure 3-1). Groups of parameters of a product can be stored in these "stacked-block" Grid data structures, but each parameter in the dataset must have the same x and y dimensions (i.e., same resolution). Within a Grid dataset, parameters can also be grouped into what HDF-EOS calls a "field", but each parameter in the field must be of the same data type (e.g., 2-byte integer).

Figure 3-1 MISR SOM Representation in HDF-EOS

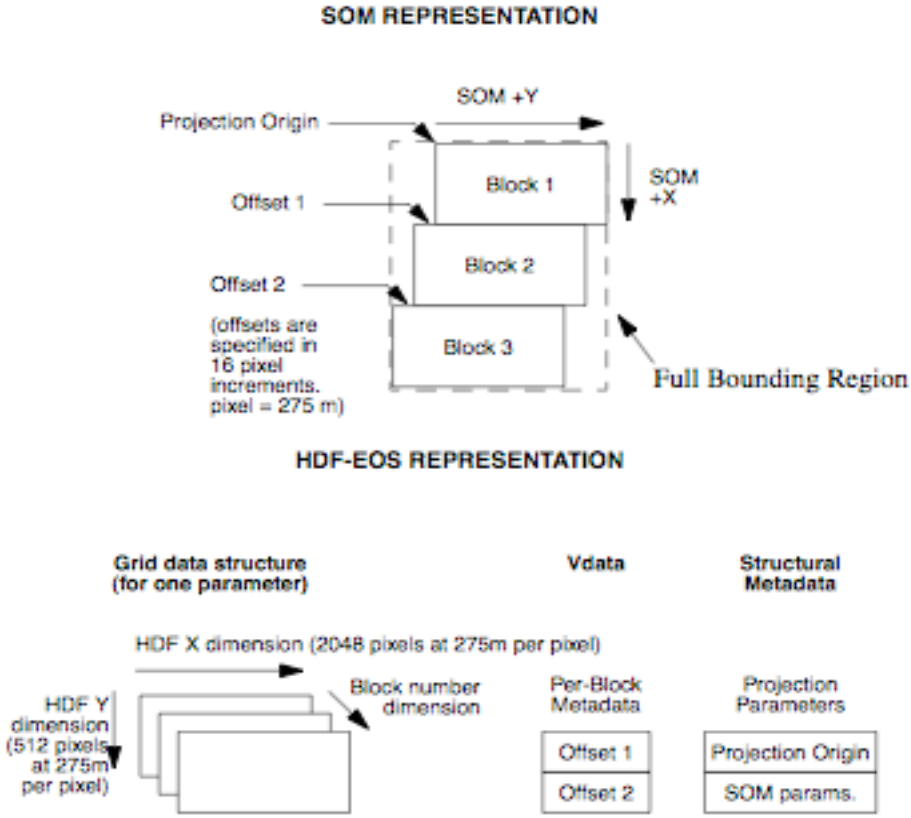

180 blocks are required to cover the seasonal sun-lit ground under a single path. Each of the 233 WRS Terra orbit paths has a separate set of 180 MISR blocks defined to span it. The MISR Ancil-

lary Geographic Product is the reference dataset containing full lat/lon information about block locations. Refer to section [9.4] for further AGP information. Each block could have been its own grid in a separate file, but that model did not meet MISR SDP IO constraints. Attempting to make one rectangular grid spanning the entire swath range was size-prohibitive. At product design time, HDF tiling and compression mechanisms could not support that large a region. The compromise solution was to store only the projection origin for Block 1 and save in a separate dataset the horizontal offset of each block beneath Block 1. The user should be aware that data acquisition does not always begin in Block 1. However, even subsetted MISR Grid data files always contain HDF structures that begin at Block 1. Empty blocks contain fill data. This offset is specified in integer pixels from the upper left hand corner of Block 1. The storing of these offsets is taken care of by a Grid library routine (GDblkSOMoffset). Offsets may be retrieved with the same routine. With the projection origin information, the projection information and the block offset information, transformations between (block/line/sample <-> SOM X/Y <-> lat/lon) are possible. HDF-EOS and the accompanying GCTP map projection library do most of the work automatically. The user is again referred to Appendix [A].

3.3 MISR PRODUCTS: METADATA FORMATS

No matter what kind of product file is created, metadata must be attached to it for descriptive purposes within the ECS environment. All files have an accompanying simple ASCII file containing metadata which is produced at the same time that the file is produced. These attached ASCII files contain what is called the Core, or Inventory, Metadata, which is the second type of metadata described below. For MISR standard data product files that use only native HDF objects, Inventory Metadata is the only type of metadata that is produced for the product.

For MISR HDF-EOS Swath and Grid file types six classes of metadata may be used: 1) Structural Metadata, 2) Core Metadata, 3) Product Metadata, 4) File Metadata, 5) Grid/Swath Metadata and 6) Per-block Metadata (for Grid files only). The first three classes of metadata are recognized by ECS and can be searched in the ECS Data Server database. The last three classes were invented by MISR and contain values required by MISR processing. Attempts to provide convenient data access often clash with requirements to meet programmatic standards. Since metadata are usually small in size, the MISR team handled such clashes by including redundant information in places where it was warranted.

3.3.1 Structural Metadata

Structural Metadata are written into HDF files automatically by HDF-EOS software when writing out HDF-EOS files. These metadata describe the structure of the file in terms of its dimensions, Swath or Grid characteristics, projection (for Grid only), and data fields. These metadata are used by HDF-EOS software to recognize file structures when reading back the data.

3.3.2 Core Metadata

Core, or Inventory, Metadata provide granule level information used for ingesting, cataloging, and searching the data product. These metadata are written into HDF-EOS files by Toolkit metadata calls. A Metadata Configuration File (MCF), which describes Inventory Metadata attributes, is used

when creating an HDF file using the Toolkit. An additional ASCII Inventory Metadata file is produced at file-time creation which provides granule level information. This ASCII file has the same name as the HDF or HDF-EOS output file with the extension of .met. These files are not described in this document.

3.3.3 Product Metadata

Product, or Archive, Metadata provide granule level information that is not used for search purposes, but which are important to be kept with the HDF-EOS file. These metadata are also attached by Toolkit metadata calls during product generation and their attributes are also contained in the MCF file. MISR processing does not currently use Archive Metadata, preferring to create and use the next three types of metadata described below.

3.3.4 File Metadata

File Metadata, when used by MISR processing, contain MISR-specific information that is common to a whole file. These metadata are stored as global attributes that are attached to the standard NCSA-supplied HDF Scientific Dataset (SD) object. (We found it necessary to use SD object global attributes since the HDF-EOS Grid and Swath APIs do not provide a means of storing global data relevant to an entire file as opposed to a single Swath or Grid data set.) These metadata are used to process a file, but they are not intended to be used for search purposes. MISR is currently using this class of metadata to store such things as additional projection information and product statistics. If a file contains only one Grid or Swath dataset, and Grid/Swath Metadata (section 3.3.5 below) are attached at that level, File Metadata may not be included in the file. The values for a particular attribute must all be of the same type.

3.3.5 Per-grid/Per-swath Metadata

Grid and Swath Metadata are internal to HDF-EOS files and are used to provide MISR-specific information unique to an individual Grid or Swath dataset in the file. An example of such meta data is the resolution of the data in a Grid or Swath dataset. In the case of Swath files, these meta data are the global attributes of a Swath dataset, while in the case of Grid files these are Grid attributes attached using HDF-EOS Grid application calls. The values for a particular attribute must all be the same type.

3.3.6 Per-block Metadata

The Per-block Metadata are internal to the file and are used to provide MISR-specific information unique to an individual block of a Grid dataset. This class of metadata is used only in Grid files. Since the HDF-EOS Grid API does not contain structures for dealing with MISR blocks, these metadata are stored using standard NCSA-supplied HDF Vdata tables within the file. A wrapper was written around the native HDF Vdata interface for reading and writing Per-block Metadata. Because native HDF expects a file id returned from Hopen, the file id returned from GDopen cannot be used when calling native HDF routines. Consequently, an HDF-EOS function, called EHidinfo, has been provided for translating grid file ids to native file ids. The native file id is then used in the Vdata calls. The attributes stored in Per-block Metadata include per-block coordinates, such as L1B2 transform information, and statistics.

3.4 MISR PRODUCTS: QUALITY ASSURANCE FORMATS

To characterize the quality of MISR standard science data products four types of Quality Assurance (QA) structures have been developed by MISR project scientists and they are related naturally to MISR instrument swaths, blocks, lines and pixels. Typical QA content consists of a collection of statistics that may be indexed over some dimension (e.g., block within a swath). The most suitable HDF type for this purpose is a standard NCSA-supplied HDF Vdata. Vdata's are collections of one-dimensional fixed-length records, where each record is composed of one or more fixed-length array fields. Vdata records are identical in structure; however, the content, or data, may vary from one record to the next. The number of records in a Vdata is not fixed, as records can be appended to a Vdata. The limitation of the Vdata structure is its restriction to a single dimension, i.e., records cannot be indexed by two or more dimensions. MISR QA Vdatas are organized within standard NCSA-supplied HDF Vgroups, container classes that collect related objects together. Using VGroups to organize the Vdatas helps define a file logically and also makes viewing MISR QA easier.

3.4.1 QA Fields

As alluded to in the above paragraph, MISR QA is organized around MISR instrument swaths, blocks, lines, and pixels. The QA statistics are generally organized within the following four fields of a Vdata.

Per-swath Field - Single value statistic (integer or floating point) relevant to an entire MISR swath of a data product. There might be on the order of 100 Per-swath QA Fields defined in a given QA file.

Per-block Field - Single value statistic (integer or floating point) relevant to a particular MISR block. There might be on the order of 100 Per-block QA Fields defined in a given QA file. There are 180 blocks in a MISR swath for each of the 4 bands of each of the nine MISR cameras. All Per-block QA Fields relating to a particular block should be indexed by that block number, but should also be easily displayed as a single statistic down the length of the swath. The Per-block QA Field is primarily used with HDF-EOS Grid products.

Per-line Field - Single value statistic (integer or floating point) relevant to a particular line in a swath. There might be on the order of 100 per-line fields defined in a given QA file. There are up to 72,000 in a MISR swath for each band of each camera. All Per-line QA Fields relating to a particular line should be indexed by that line number, but should also be easily displayed as a single statistic down the length of the swath. The Per-line QA Field is primarily used with HDF-EOS Swath products.

Per-pixel Field - Single value statistic (integer or floating point) relevant to a particular pixel in a swath. There are 1520 pixels in a line. All Per-pixel QA Fields relating to a particular pixel should be indexed by that pixel number. The Per-pixel QA Field is primarily used with HDF-EOS Swath products.

MISR standard data products also incorporate a few unique QA structures in addition to the above

four. These additional QA structures are special in that they have more than one dimension which are not predefined in size. An example is the Grid Cell structure needed by L1B2:

Per-grid Cell Field - Single value statistic (integer or floating point) relevant to a particular L1B2 grid cell in a particular block, where the number of grid cells per block ranges from 2 to 6. All Per-grid Cell Fields are indexed by block and then by grid cell.

3.4.2 Standard QA Vdatas and VGroups

All Vgroups and Vdatas are identified by a name and class. Since HDF identifies objects by unique reference and tag numbers, the class and name do not have to be unique. However, HDF functions that search for names/classes, as opposed to reference numbers and tags, return the first occurrence found. A typical convention, which MISR QA adheres to, is to have unique names and classes specific to a type of Vdata. All Vdatas that share a class name have identical record structures.

A black box set of routines for performing all MISR QA operations would be useful. However, this is not possible because every MISR data product has its own unique set of QA statistics. The best that we can achieve is to enforce a set of rules for QA file formats and provide a library of code that wraps low level HDF calls for accessing the QA Vdatas. The rules of QA file format are as follows:

- All QA types will have a Vgroup to which all related Vdatas and Vgroups will be attached.
- All QA data are stored in Vdatas, where Vdata attributes may be used where appropriate.
- All Vdatas will belong to a single Vgroup; lone Vdatas and membership to multiple Vgroups are not allowed.
- A naming convention will be established for Vdata/Vgroup names and classes.
- The Per-swath, Per-block, Per-line, and Per-pixel QA types will have predefined names located in a .h file.
- One exception to the rule: QA metadata for describing the origin of the data (time of collection, orbit number, etc.) don't really belong in any particular Vgroup or Vdata; therefore, they will be implemented as global SD attributes.

The basic organization of the four standard QA types is illustrated in Figure 3-2 below. The swath QA is stored in a Vdata for consistency. There will only be one record in the Vdata because MISR products are created on a per swath basis. The block, line, and pixel level QA use the block, line, and pixel dimension, respectively, as the record dimension. It is probably most common for these records to be contiguous; however, to allow a more sparse storage scheme (i.e., maybe only some blocks have QA) one of the fields in the Per-block record indicates the MISR block number and one of the fields in the Per-line record indicates the line number.

Figure 3-2 MISR QA standard Vdata and Vgroup structures

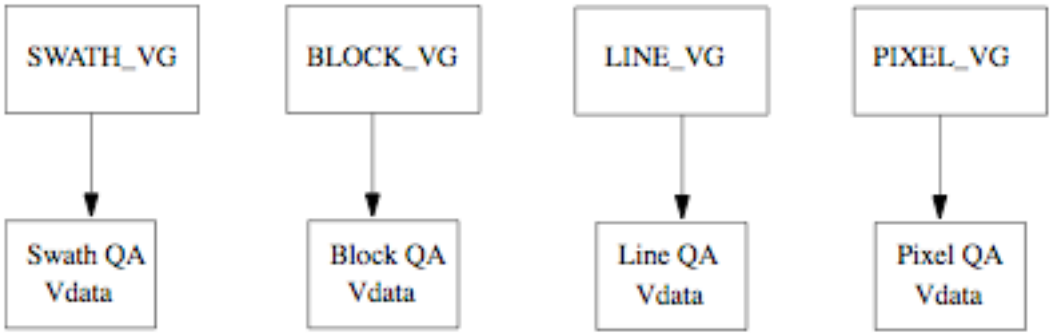

We have adopted the convention of using unique names for Vdatas and Vgroups and unique classes to describe the type of QA. For clarity these conventions, as well as some additional constraints from MISR SDP, are enumerated below:

- All type of names (Vgroup, Vdata, attribute, field, etc.) should contain no spaces. Underscores are acceptable. To conserve space MISR capitalizes the first letter of each word, e.g., "SwathQaRed1x1".
- All Vgroup/Vdata names within a single MISR file are unique.
- All classes are prefixed by the name of the MISR product, guaranteeing uniqueness across product types. For example, the L1B2 terrain projected radiance QA file will prefix all classes with the "Terrain" string.
- Within a single file Vdata classes are common for identical record types, but unique for each type of record. For example, some level L1B1 QA are separated by band and average mode, but information for each is the same. All of the individual Vdatas (e.g., "LineQaRed1x1", "LineQaGreen4x4") share one class (e.g., "B1GlobalModeLineQaBandAvgMode"). However, a global line QA structure (e.g., "LineQaGlobal") has a different class ("B1GlobalModeLineQaGlobal").
- Vgroup classes can be conveniently named the same as the Vgroup name with the product type prepended. Unlike Vdatas, there aren't multiple instances of Vgroups that share a common class.

3.4.3 Special QA Vdatas and VGroups

There are no hard rules for adding custom MISR QA structures; whatever is logical and fits within the general QA rules is the best approach. As an example, the L1B2 Terrain processing operates on units called Grid Cells. A Grid Cell is a subregion of a block. The number of grid cells in a block is not fixed, nor known, until the block is actually processed. This prevents us from just adding grid cell fields to the block QA and making each field n-dimensional with n being the number of grid cells in that block. Remember that Vdata records are fixed in length. We could determine the maximum value of n and use it to fix a Vdata record length; however, this would waste a lot of space in the QA file. Therefore, Grid Cell QA must be stored in a separate Vdata. It is desirable to index a Grid Cell by the block to which it belongs, as well its grid cell index. If we create a single Vdata for the Grid Cell QA, then one of the fields would map each record to the appropriate block number. Another alternative is to create a Vdata for each block of Grid Cells. This latter approach proves to

be a better solution because Grid Cells are usually examined in the context of a block.

An example of MISR QA that incorporates the standard and special Grid Cell QA types is illustrated in Figure 3-3. The L1B2 product tracks swath level QA statistics for each band, where each band has a particular averaging mode associated with it. In this instance we create a distinct Vdata for each band with the averaging mode in the name. So, if the Red band is in the 1x1 averaging mode, we have the Vdata "Red 1x1 QA." These Vdatas are attached to the swath Vgroup. The Grid Cell Vgroup is placed under the Block Vgroup to associate them logically as discussed above. This implies that someone wouldn't be interested in looking at Grid Cell QA without first examining block QA. Because there are multiple Grid Cell Vdatas, we append the block number to the base name (e.g, "Grid Cell QA 1").

The four standard metadata types - swath, block, pixel, and line, have the following rules for all products:

- Per-swath Vdata always consists of a single record;
- Per-block Vdata maps block number to record number; the convention used in the product data files is that record 0 corresponds to Block 1, record 1 corresponds to Block 2, etc., even though we only process ~140 of the 180 blocks per swath; required fields are "BlockNumber" and "ValidRecord;"
- Per-line Vdata maps line number to record number; the convention used in the product data files is that record 0 corresponds to Line 0, etc.; required fields are "LineNumber" and "ValidRecord;"
- Per-pixel Vdata maps pixel number to record number; the convention used in the product data files is that record 0 corresponds to Pixel 0, etc.; required fields are "PixelNumber" and "ValidRecord."

Figure 3-3 MISR QA special Grid Cell Vdata structures

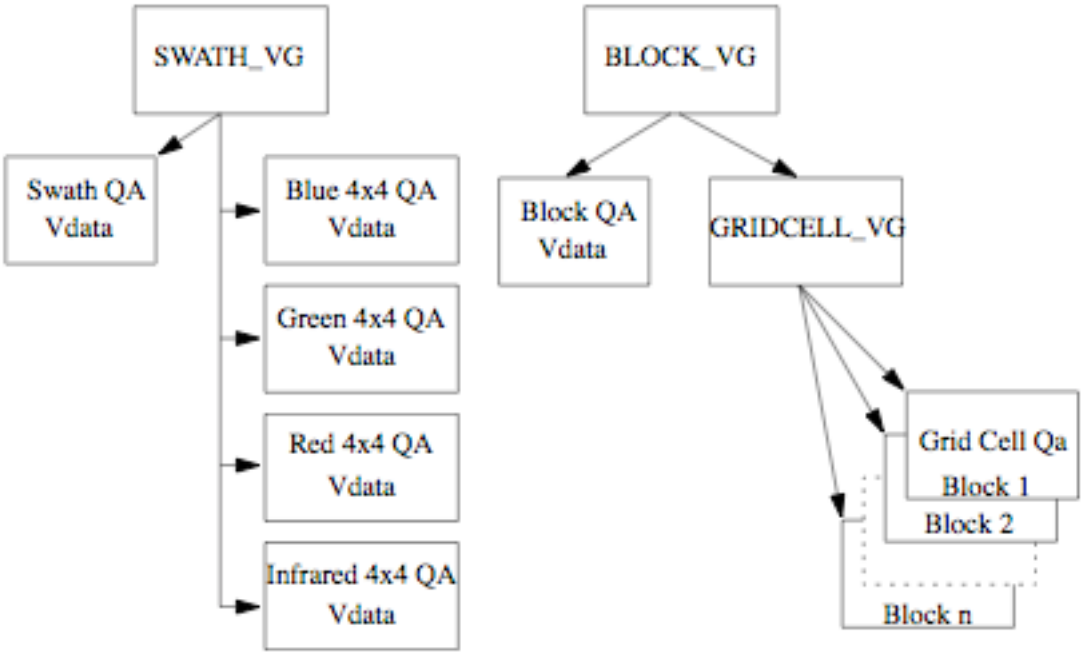

4 MISR LEVEL 1A REFORMATTED ANNOTATED PRODUCT

4.1 MISR LEVEL 1A PRODUCT GRANULE NAMES

MISR Level 1A Reformatted Annotated Products are composed of the six different file granules listed below:

Table 4-1: MISR Level 1A File Granule Names

MISR LEVEL 1A FILE GRANULE NAME	ESDT Name	Section
MISR_AM1_FM_SCI_Pmmm_Onnnnnn_cc_Fff_vvvv.hdf	MIL1A	4.5
MISR_AM1_FM_CAL_Pmmm_Onnnnnn_cc_Fff_vvvv.hdf	MI1AC	4.6
MISR_AM1_FM_MTR_CL_Pmmm_Onnnnnn_Fff_vvvv.hdf	MI1AMOT	4.7
MISR_AM1_FM_NAV_GM_Pmmm_Onnnnnn_Fff_vvvv.hdf	MI1ANAV	4.8
MISR_AM1_FM_ENG_GM_Pmmm_Onnnnnn_Fff_vvvv.hdf	MI1AENG1	4.9
MISR_AM1_FM_OBC_CL_Pmmm_Onnnnnn_Fff_vvvv.hdf	MI1AOBC	4.10

4.2 MISR LEVEL 1A PRODUCT GRANULE BRIEF DESCRIPTIONS

4.2.1 MISR LEVEL 1A MIL1A CCD Science Instrument Data

MISR Level 1A (MIL1A) CCD Science Instrument Data are the primary archive of the MISR instrument. The MISR CCD Science Instrument Data acquired from all nine of the MISR cameras for each of the four bands represent the raw MISR input data staged for MISR Science Instrument Data processing. There are nine file granules of this type, one corresponding to each of the nine MISR cameras. Each file granule contains four entire swaths of data, one swath for each of the four MISR bands associated with each MISR camera.

There are three functional processing steps to transform the raw Level 0 data into the Level 1A output: reversal of the square-root encoding performed on the instrument data, byte-alignment, and reformatting of CCD line array data. The reversal of the square-root encoding converts the 12-bit data fields extracted from the CCD Science Instrument Data packets into 14-bit CCD DN data values. The L1A CCD Science Instrument Data include both radiance data and Image Data Quality Indicator (IDQI) parameters. The IDQI values are packed in the least significant 2 bits of the DN data. Therefore, each CCD Science Instrument Datum at the pixel level is 16-bits: 14 bits for the radiance value and 2-bits for the IDQI value. Verifications of packet sequencing, formats and sizes are also executed and reported. The Level 1A output product is time-ordered, band-separated and error-checked.

ECS metadata are generated and incorporated into the product, as well as placed into an associated Core, or Product, Metadata file. A QA statistics file is no longer generated for this product.

Processing of the raw CCD Science Instrument Data no longer includes generation of the Level 1

browse product. The Level 1 browse product was output as a JPEG file in HDF RIS8 format. The browse product was based on the MISR red band with a 1x1 (275 m by 275 m) sampling that is pixel-averaged uniformly throughout the entire swath to a resolution of 4.4 km.

4.2.2 MISR LEVEL 1A MI1AC CCD Calibration Data

MISR Level 1A (MI1AC) CCD Calibration Data are acquired as part of an on-orbit calibration experiment. These data are distinct from CCD Science Instrument Data and are identified with nine different APID (packet identification number) codes. The MISR L1A CCD Calibration Data include both radiance data and Image Data Quality Indicator (IDQI) parameters. The IDQI values are packed in the least significant 2 bits of the DN data. Hence, the per-pixel format of these data are identical to the CCD Science Instrument Data.

4.2.3 MISR LEVEL 1A MI1AMOT Motor Data

MISR Level 1A (MI1AMOT) Motor Data are acquired as part of an on-orbit calibration experiment. These data consist of measurements of the MISR instrument calibration panel motor currents. These data also include packet data for motor ID, motor current sampling frequency, and motor temperature.

4.2.4 MISR LEVEL 1A MI1ANAV Navigation Data

MISR Level 1A (MI1ANAV) Navigation Data include all spacecraft position, velocity, attitude and attitude rate data incorporated into MISR Level 1A Engineering Data packets. These data are read from the Command and Telemetry Bus during the period of one EOS-TERRA orbit.

4.2.5 MISR LEVEL 1A MI1AENG Engineering Data

MISR Level 1A (MI1AENG1) Engineering Data provide all of the data needed to describe the state of the instrument for Level 1 processing and analysis at a later date. These data are composed primarily of temperatures, voltages and currents of each camera, the optical bench, calibration-diodes, and system electronics. Verification and reporting flags for latches and limit-switches on the cover/goniometer and the calibration diffuser panels are also incorporated into these data.

4.2.6 MISR LEVEL 1A MI1AOBC On-Board Calibration Data

MISR Level 1A (MI1AOBC) On-board Calibration Data provide the radiometry from PIN and HQE diodes and goniometer mechanism readings collected during calibration mode operations near the north and south poles and over the darkside of the Earth (or during science mode operations over the sunlit side of the Earth). The diode radiometry acquired during north and south pole calibration sequences will be used to determine brightness and reflective characteristics of a MISR diffuser panel as observed by each of the nine MISR cameras.

4.3 MISR LEVEL 1A PRODUCT GRANULE DATA SETS

The MISR Level 1A Standard Science Data Product is composed of 6 separate ESDTs, each with one physical file format, as shown in Table 4-2. Each physical file is in the HDF-EOS Swath for mat and each contains one or more HDF-EOS Swath datasets (Table 4-2).

Table 4-2: MISR Level 1A Reformatted Annotated Product Files and Swath Datasets

ESDT Shortname	Local Granule ID[1]	Swath Dataset Name
MIL1A	MISR_AM1_FM_SCI_Pmmm_Onnnnnn_cc_Fff_vvvv.hdf	blue_band_1x1 blue_anc_1x1 green_band_1x1 green_anc_1x1 red_band_1x1 red_anc_1x1 nir_band_1x1 nir_anc_1x1 blue_band_1x4 blue_anc_1x4 green_band_1x4 green_anc_1x4 red_band_1x4 red_anc_1x4 nir_band_1x4 nir_anc_1x4 blue_band_2x2 blue_anc_2x2 green_band_2x2 green_anc_2x2 red_band_2x2 red_anc_2x2 nir_band_2x2 nir_anc_2x2 blue_band_4x4 blue_anc_4x4 green_band_4x4 green_anc_4x4 red_band_4x4 red_anc_4x4 nir_band_4x4 nir_anc_4x4 spurious_pkts
MI1AC	MISR_AM1_FM_CAL_Pmmm_Onnnnnn_cc_Fff_vvvv.hdf	blue_band_1x1 blue_anc_1x1 green_band_1x1 green_anc_1x1 red_band_1x1

1 Where Pmmm corresponds to the orbit path number, Onnnnnn is the absolute orbit number, cc is the camera identifier, and Fff is the file format version and vvvv is the file version number.

		red_anc_1x1 nir_band_1x1 nir_anc_1x1 blue_band_1x4 blue_anc_1x4 green_band_1x4 green_anc_1x4 red_band_1x4 red_anc_1x4 nir_band_1x4 nir_anc_1x4 blue_band_2x2 blue_anc_2x2 green_band_2x2 green_anc_2x2 red_band_2x2 red_anc_2x2 nir_band_2x2 nir_anc_2x2 blue_band_4x4 blue_anc_4x4 green_band_4x4 green_anc_4x4 red_band_4x4 red_anc_4x4 nir_band_4x4 nir_anc_4x4
MI1AMOT	MISR_AM1_FM_MTR_CL_Pmmm_Onnnnnn_Fff_vvvv.hdf	MTRSwath
MI1AENG1	MISR_AM1_FM_ENG_GM_Pmmm_Onnnnnn_Fff_vvvv.hdf	EngSwath
MI1ANAV	MISR_AM1_FM_NAV_GM_Pmmm_Onnnnnn_Fff_vvvv.hdf	NavSwath
MI1AOBC	MISR_AM1_FM_OBC_CL_Pmmm_Onnnnnn_Fff_vvvv.hdf	OBCSwath

4.4 MISR LEVEL 1A PRODUCT SHARED SWATH DESCRIPTORS

Dimension	Description	Valid Values
DownTrack	Unlimited, number of lines acquired during the collection of MISR CCD science data	0 -
CrossTrack	Number of CCD DNs acquired	380 for 4x4 averaging 760 for 2x2 averaging 1520 for 1x1, 1x4 averaging

For the nominal Global Mode called “Super Stereo”, the following table relates the spatial resolution to camera and band.

Table 4-3: Spatial Resolution Distribution for Global mode

Grid	DF	CF	BF	AF	AN	AA	BA	CA	DA
BlueBand	1.1 km x	1.1 km x	1.1 km x	1.1 km x	275 m x	1.1 km x	1.1 km x	1.1 km x	1.1 km x

	1.1 km	1.1 km	1.1 km	1.1 km	275 m	1.1 km	1.1 km	1.1 km	1.1 km
GreenBand	1.1 km x 1.1 km	1.1 km x 1.1 km	1.1 km x 1.1 km	1.1 km x 1.1 km	275 m x 275 m	1.1 km x 1.1 km	1.1 km x 1.1 km	1.1 km x 1.1 km	1.1 km x 1.1 km
RedBand	275 m x 275 m	275 m x 275 m	275 m x 275 m	275 m x 275 m	275 m x 275 m	275 m x 275 m	275 m x 275 m	275 m x 275 m	275 m x 275 m
NIRBand	1.1 km x 1.1 km	1.1 km x 1.1 km	1.1 km x 1.1 km	1.1 km x 1.1 km	275 m x 275 m	1.1 km x 1.1 km	1.1 km x 1.1 km	1.1 km x 1.1 km	1.1 km x 1.1 km

For Local Mode, the following table relates the spatial resolution to camera and band.

Table 4-4: Spatial Resolution Distribution for Local mode

Grid	DF	CF	BF	AF	AN	AA	BA	CA	DA
BlueBand	275 m x 275 m	275 m x 275 m	275 m x 275 m	275 m x 275 m	275 m x 275 m	275 m x 275 m	275 m x 275 m	275 m x 275 m	275 m x 275 m
GreenBand	275 m x 275 m	275 m x 275 m	275 m x 275 m	275 m x 275 m	275 m x 275 m	275 m x 275 m	275 m x 275 m	275 m x 275 m	275 m x 275 m
RedBand	275 m x 275 m	275 m x 275 m	275 m x 275 m	275 m x 275 m	275 m x 275 m	275 m x 275 m	275 m x 275 m	275 m x 275 m	275 m x 275 m
NIRBand	275 m x 275 m	275 m x 275 m	275 m x 275 m	275 m x 275 m	275 m x 275 m	275 m x 275 m	275 m x 275 m	275 m x 275 m	275 m x 275 m

4.5 MISR LEVEL 1A MIL1A CCD SCIENCE INSTRUMENT DATA

4.5.1 File Metadata Description

None.

4.5.2 Per-swath Metadata Description

Table 4-5: CCD Science Per-Swath Metadata

Swath Metadata	Definition	Data Type	Valid Values
NumLines	not used	uint32	0
NumSamples	not used	uint32	0
NumSatSamples	not used	uint32	0
NumSatLines	not used	uint32	0
NumLinesWithSatPixels	not used	uint32	0
NumLinesThreshFail	not used	uint32	0

4.5.3 Per-block Metadata Description

N/A

4.5.4 Per-line Metadata Description

The CCD Science Data file uses primarily Per-Line Metadata (Table 4-6). Per-Line Metadata are stored in the Time Tags SDS linked to the DNs SDS by sharing the same X-Dim. For instance, the red band DNs are in the swath red_band_1x1.DN. The corresponding Per-Line Metadata is in the swath red_anc_1x1.Time Tags.

Table 4-6: CCD Science Per-Line Metadata

PerLine Metadata	Definition	Data Type	Valid Range
time_days	Time tag(0) -first 16 bits of 64 bit time tag field representing days	FLOAT32	0 - 65535
time_msec1	Time tag(1) - second 16 bits of 64 bit time tag field representing milliseconds	FLOAT32	0 - 65535
time_msec2	Time tag(2) - third 16 bits of 64 bit time tag field representing milliseconds	FLOAT32	0 - 65535
time_micro	Time tag(3) - fourth 16 bits of 64 bit time tag field representing microseconds	FLOAT32	0 - 65535
Line_mean	Active pixel region line average	FLOAT32	0 - 16383
Std_dev_ac	Active pixel region standard deviation	FLOAT32	0 - 400
Min_ac_dn	Minimum DN value in active pixel region	FLOAT32	0 - 16383
Max_ac_dn	Maximum DN value in active pixel region	FLOAT32	0 - 16383
Overclock_mean	Overclock pixel region line average	FLOAT32	0 - 1000
Std_dev_oc	Overclock pixel region standard deviation	FLOAT32	0 - 400
Min_oc_dn	Minimum DN value in overclock pixel region	FLOAT32	0 - 16383
Max_oc_dn	Maximum DN value in overclock pixel region	FLOAT32	0 - 16383
rti_eosec	Number of 8 ms intervals, eosec -> MSYNC	FLOAT32	0 - 5
Ccd_int_time	CCD line integration time	FLOAT32	0 - 40.8 ms
Cam_mode_flag	Camera mode (global/local)	FLOAT32	0=Local, 1=Global

4.5.5 Per-pixel Metadata Description

None.

4.5.6 Swath Data Set Descriptions

Table 4-7: CCD Science Swath Field Definitions

Field Name	Dimension	Number	Units	Transformation	Flag

Parameter Description	List	Type			Values
Swath blue_band_1x1					
DNs	DownTrack, CrossTrack	UINT16	dn	Bit packed: Bits 0-1 = IDQI Bits 2-15 = dn	IDQI: 0 = Within specifications 1 = Reduced accuracy 2 = Not usable for science 3 = Unusable for any purpose
Swath_blue_anc_1x1					
(Field definitions described Table [4-6])					
Swath green_band_1x1					
DNs	DownTrack, CrossTrack	UINT16	dn	Bit packed: Bits 0-1 = IDQI Bits 2-15 = dn	IDQI: 0 = Within specifications 1 = Reduced accuracy 2 = Not usable for science 3 = Unusable for any purpose
Swath green_anc_1x1					
(Field definitions described Table [4-6])					
Swath red_band_1x1					
DNs	DownTrack, CrossTrack	UINT16	dn	Bit packed: Bits 0-1 = IDQI Bits 2-15 = dn	IDQI: 0 = Within specifications 1 = Reduced accuracy 2 = Not usable for science 3 = Unusable for any purpose
Swath red_anc_1x1					
(Field definitions described Table [4-6])					
Swath nir_band_1x1					
DNs	DownTrack, CrossTrack	UINT16	dn	Bit packed: Bits 0-1 = IDQI Bits 2-15 = dn	IDQI: 0 = Within specifications 1 = Reduced accuracy 2 = Not usable for science 3 = Unusable for any purpose
Swath nir_anc_1x1					
(Field definitions described Table [4-6])					
Swath blue_band_1x4					
DNs	DownTrack, CrossTrack	UINT16	dn	Bit packed: Bits 0-1 = IDQI Bits 2-15 = dn	IDQI: 0 = Within specifications 1 = Reduced accuracy 2 = Not usable for science 3 = Unusable for any purpose
Swath blue_anc_1x4					
(Field definitions described Table [4-6])					
Swath green_band_1x4					
DNs	DownTrack, CrossTrack	UINT16	dn	Bit packed: Bits 0-1 = IDQI Bits 2-15 = dn	IDQI: 0 = Within specifications 1 = Reduced accuracy 2 = Not usable for science 3 = Unusable for any purpose

Swath green_anc_1x4					
(Field definitions described Table [4-6])					
Swath red_band_1x4					
DNs	DownTrack, CrossTrack	UINT16	dn	Bit packed: Bits 0-1 = IDQI Bits 2-15 = dn	IDQI: 0 = Within specifications 1 = Reduced accuracy 2 = Not usable for science 3 = Unusable for any purpose
Swath red_anc_1x4					
(Field definitions described Table [4-6])					
Swath nir_band_1x4					
DNs	DownTrack, CrossTrack	UINT16	dn	Bit packed: Bits 0-1 = IDQI Bits 2-15 = dn	IDQI: 0 = Within specifications 1 = Reduced accuracy 2 = Not usable for science 3 = Unusable for any purpose
Swath nir_anc_1x4					
(Field definitions described Table [4-6])					
Swath blue_band_2x2					
DNs	DownTrack, CrossTrack	UINT16	dn	Bit packed: Bits 0-1 = IDQI Bits 2-15 = dn	IDQI: 0 = Within specifications 1 = Reduced accuracy 2 = Not usable for science 3 = Unusable for any purpose
Swath blue_anc_2x2					
(Field definitions described Table [4-6])					
Swath green_band_2x2					
DNs	DownTrack, CrossTrack	UINT16	dn	Bit packed: Bits 0-1 = IDQI Bits 2-15 = dn	IDQI: 0 = Within specification 1 = Reduced accuracy 2 = Not usable for science 3 = Unusable for any purpose
Swath green_anc_2x2					
(Field definitions described Table [4-6])					
Swath red_band_2x2					
DNs	DownTrack, CrossTrack	UINT16	dn	Bit packed: Bits 0-1 = IDQI Bits 2-15 = dn	IDQI: 0 = Within specifications 1 = Reduced accuracy 2 = Not usable for science 3 = Unusable for any purpose
Swath red_anc_2x2					
(Field definitions described Table [4-6])					
Swath nir_band_2x2					
DNs	DownTrack, CrossTrack	UINT16	dn	Bit packed: Bits 0-1 = IDQI Bits 2-15 = dn	IDQI: 0 = Within specifications 1 = Reduced accuracy 2 = Not usable for science

					3 = Unusable for any purpose
Swath red_anc_2x2					
(Field definitions described Table [4-6])					
Swath blue_band_4x4					
DNs	DownTrack, CrossTrack	UINT16	dn	Bit packed: Bits 0-1 = IDQI Bits 2-15 = dn	IDQI: 0 = Within specifications 1 = Reduced accuracy 2 = Not usable for science 3 = Unusable for any purpose
Swath blue_anc_4x4					
(Field definitions described Table [4-6])					
Swath green_band_4x4					
DNs	DownTrack, CrossTrack	UINT16	dn	Bit packed: Bits 0-1 = IDQI Bits 2-15 = dn	IDQI: 0 = Within specifications 1 = Reduced accuracy 2 = Not usable for science 3 = Unusable for any purpose
Swath green_anc_4x4					
(Field definitions described Table [4-6])					
Swath red_band_4x4					
DNs	DownTrack, CrossTrack	UINT16	dn	Bit packed: Bits 0-1 = IDQI Bits 2-15 = dn	IDQI: 0 = Within specifications 1 = Reduced accuracy 2 = Not usable for science 3 = Unusable for any purpose
Swath red_anc_4x4					
(Field definitions described Table [4-6])					
Swath nir_band_4x4					
DNs	DownTrack, CrossTrack	UINT16	dn	Bit packed: Bits 0-1 = IDQI Bits 2-15 = dn	IDQI: 0 = Within specifications 1 = Reduced accuracy 2 = Not usable for science 3 = Unusable for any purpose
Swath nir_anc_4x4					
(Field definitions described Table [4-6])					
Swath spurious_pkts					
SpuriousPkts	PktDownTrack, PktCrossTrack	UCHAR8	n/a	n/a	n/a

4.5.7 CCD Science Product QA

Additional Quality Assessment Metadata is no longer reported in HDF-EOS vdata structures. Separate QA Statistics files are no longer generated.

4.6 MISR LEVEL 1A MI1AC CCD CALIBRATION DATA

4.6.1 File Metadata Description

None.

4.6.2 Per-swath Metadata Description

Table 4-8: CCD Calibration Per-swath Metadata

Swath Metadata	Definition	Data Type	Valid Values
PGE4_ORBIT_NO	Orbit counter	INT32	1-
PGE4_PATH_NO	Orbit path counter	INT32	1-233
PGE4_OUT_OF_ORDER_PKTS	LIsting of out of order packets found	INT16	(Array of 50)
PGE4_DUPLICATE_PKTS	Listing of duplicate packets found	INT16	(Array of 50
PGE4_PIXEL_REVERSAL	Pixel reversal determinant	INT32	0/1

4.6.3 Per-block Metadata Description

None.

4.6.4 Per-line Metadata Description

The CCD Calibration Data file uses primarily Per-Line Metadata (Table 4-9). Per-Line Metadata is stored in the TimeTags SDS linked to the DNs SDS by sharing the same X-Dim.

Table 4-9: CCD Calibration Per-Line Metadata

PerLine Metadata	Definition	Data Type	Valid Range
time_days	Time tag(0) -first 16 bits of 64 bit time tag field representing days	FLOAT32	0 - 65535
time_msec1	Time tag(1) - second 16 bits of 64 bit time tag field representing milliseconds	FLOAT32	0 - 65535
time_msec2	Time tag(2) - third 16 bits of 64 bit time tag field representing milliseconds	FLOAT32	0 - 65535
time_micro	Time tag(3) - fourth 16 bits of 64 bit time tag field representing microseconds	FLOAT32	0 - 65535
Line_mean	Active pixel region line average	FLOAT32	0 - 16383
Std_dev_ac	Active pixel region standard deviation	FLOAT32	0 - 400
Min_ac_dn	Active pixel region standard deviation	FLOAT32	0
Max_ac_dn	Maximum DN value in active pixel region	FLOAT32	16383

Overclock_mean	Overclock pixel region line average	FLOAT32	0 - 1000
Std_dev_oc	Overclock pixel region standard deviation	FLOAT32	0 - 400
Min_oc_dn	Minimum DN value in overclock pixel region	FLOAT32	0
Max_oc_dn	Maximum DN value in overclock pixel region	FLOAT32	16383
Sun_angle_x	Sun angle - x coordinate	FLOAT32	
Sun_angle_y	Sun angle - y coordinate	FLOAT32	
Sun_angle_z	Sun angle - z coordinate	FLOAT32	
Ccd_int_time	CCD line integration time	FLOAT32	0 - 40.8

4.6.5 Per-pixel Metadata Description

None.

4.6.6 Swath Data Set Descriptions

For CCD calibration processing, the data collected during any of the types of calibration sequence modes (North pole, South pole, Dark, Diode) is stored in an appropriate SDS based on band and averaging mode. Since the cameras are taken through multiple averaging modes and integration times during any one calibration operation the data collected is stored in time order in the appropriate band/averaging mode defined SDSs. Ancillary metadata for each set of calibration DNs (including time tag) are defined in Table 4-10.

Table 4-10: CCD Calibration Swath Field Definitions

Field Name Parameter Description	Dimension List	Number Type	Units	Transformation	Flag Values
Swath blue_band_1x1					
DNs	DownTrack, CrossTrack	UINT16	dn	Bit packed: Bits 0-1 = SDQI Bits 2-15 = dn	SDQI: 0 = No known anomalies 1 = Overclock out-of-range 2 = Saturated pixels 3 = Data transmission errors
Swath_blue_anc_1x1					
(Field definitions described Table 4-10)					
Swath green_band_1x1					
DNs	DownTrack, CrossTrack	UINT16	dn	Bit packed: Bits 0-1 = SDQI Bits 2-15 = dn	SDQI: 0 = No known anomalies 1 = Overclock out-of-range 2 = Saturated pixels 3 = Data transmission errors
Swath green_anc_1x1					
(Field definitions described Table 4-10)					
Swath red_band_1x1					
DNs	DownTrack,	UINT16	dn	Bit packed:	SDQI:

	CrossTrack			Bits 0-1 = SDQI Bits 2-15 = dn	0 = No known anomalies 1 = Overclock out-of-range 2 = Saturated pixels 3 = Data transmission errors
Swath red_anc_1x1					
(Field definitions described Table 4-10)					
Swath nir_band_1x1					
DNs	DownTrack, CrossTrack	UINT16	dn	Bit packed: Bits 0-1 = SDQI Bits 2-15 = dn	SDQI: 0 = No known anomalies 1 = Overclock out-of-range 2 = Saturated pixels 3 = Data transmission errors
Swath nir_anc_1x1					
(Field definitions described Table 4-10)					
Swath blue_band_1x4					
DNs	DownTrack, CrossTrack	UINT16	dn	Bit packed: Bits 0-1 = SDQI Bits 2-15 = dn	SDQI: 0 = No known anomalies 1 = Overclock out-of-range 2 = Saturated pixels 3 = Data transmission errors
Swath blue_anc_1x4					
(Field definitions described Table 4-10)					
Swath green_band_1x4					
DNs	DownTrack, CrossTrack	UINT16	dn	Bit packed: Bits 0-1 = SDQI Bits 2-15 = dn	SDQI: 0 = No known anomalies 1 = Overclock out-of-range 2 = Saturated pixels 3 = Data transmission errors
Swath green_anc_1x4					
(Field definitions described Table 4-10)					
Swath red_band_1x4					
DNs	DownTrack, CrossTrack	UINT16	dn	Bit packed: Bits 0-1 = SDQI Bits 2-15 = dn	SDQI: 0 = No known anomalies 1 = Overclock out-of-range 2 = Saturated pixels 3 = Data transmission errors
Swath red_anc_1x4					
(Field definitions described Table 4-10)					
Swath nir_band_1x4					
DNs	DownTrack, CrossTrack	UINT16	dn	Bit packed: Bits 0-1 = SDQI Bits 2-15 = dn	SDQI: 0 = No known anomalies 1 = Overclock out-of-range 2 = Saturated pixels 3 = Data transmission errors
Swath nir_anc_1x4					
(Field definitions described Table 4-10)					

Swath blue_band_2x2					
DNs	DownTrack, CrossTrack	UINT16	dn	Bit packed: Bits 0-1 = SDQI Bits 2-15 = dn	SDQI: 0 = No known anomalies 1 = Overclock out-of-range 2 = Saturated pixels 3 = Data transmission errors
Swath blue_anc_2x2					
(Field definitions described Table 4-10)					
Swath green_band_2x2					
DNs	DownTrack, CrossTrack	UINT16	dn	Bit packed: Bits 0-1 = SDQI Bits 2-15 = dn	SDQI: 0 = No known anomalies 1 = Overclock out-of-range 2 = Saturated pixels 3 = Data transmission errors
Swath green_anc_2x2					
(Field definitions described Table 4-10)					
Swath red_band_2x2					
DNs	DownTrack, CrossTrack	UINT16	dn	Bit packed: Bits 0-1 = SDQI Bits 2-15 = dn	SDQI: 0 = No known anomalies 1 = Overclock out-of-range 2 = Saturated pixels 3 = Data transmission errors
Swath red_anc_2x2					
(Field definitions described Table 4-10)					
Swath nir_band_2x2					
DNs	DownTrack, CrossTrack	UINT16	dn	Bit packed: Bits 0-1 = SDQI Bits 2-15 = dn	SDQI: 0 = No known anomalies 1 = Overclock out-of-range 2 = Saturated pixels 3 = Data transmission errors
Swath red_anc_2x2					
(Field definitions described Table 4-10)					
Swath blue_band_4x4					
DNs	DownTrack, CrossTrack	UINT16	dn	Bit packed: Bits 0-1 = SDQI Bits 2-15 = dn	SDQI: 0 = No known anomalies 1 = Overclock out-of-range 2 = Saturated pixels 3 = Data transmission errors
Swath blue_anc_4x4					
(Field definitions described Table 4-10)					
Swath green_band_4x4					
DNs	DownTrack, CrossTrack	UINT16	dn	Bit packed: Bits 0-1 = SDQI Bits 2-15 = dn	SDQI: 0 = No known anomalies 1 = Overclock out-of-range 2 = Saturated pixels 3 = Data transmission errors
Swath green_anc_4x4					

(Field definitions described Table 4-10)					
Swath red_band_4x4					
DNs	DownTrack, CrossTrack	UINT16	dn	Bit packed: Bits 0-1 = SDQI Bits 2-15 = dn	SDQI: 0 = No known anomalies 1 = Overclock out-of-range 2 = Saturated pixels 3 = Data transmission errors
Swath red_anc_4x4					
(Field definitions described Table 4-10)					
Swath nir_band_4x4					
DNs	DownTrack, CrossTrack	UINT16	dn	Bit packed: Bits 0-1 = SDQI Bits 2-15 = dn	SDQI: 0 = No known anomalies 1 = Overclock out-of-range 2 = Saturated pixels 3 = Data transmission errors
Swath nir_anc_4x4					
(Field definitions described Table 4-10)					
Swath spurious_pkts	PktDownTrack, PktCrossTrack	UCHAR8	n/a	n/a	n/a

4.6.7 Per-swath QA Metadata

None.

4.7 MISR LEVEL 1A MI1AMOT MOTOR DATA

4.7.1 File Metadata Description

None.

4.7.2 Per-swath Metadata Description

Table 4-11: Motor Per-swath Metadata

Swath Metadata	Definition	Data Type	Valid Values
PGE3_ORBIT_NO	Orbit counter	INT32	1-
PGE3_PATH_NO	Orbit path counter	INT32	1-233
PGE3_START_TIME	Calibration start time	FLOAT64	S/C time
PGE3_STOP_TIME	Calibration stop time	FLOAT64	S/C time
PGE3_NUM_MTR_SAMPLES	Number of motor samples	INT32	
PGE3_SWATH_FLAGS	Quality flag for calibration	INT8	1-128
PGE3_OUT_OF_ORDER_PKTS	LIsting of out of order packets found	INT16	(Array of 50)

PGE3_DUPLICATE_PKTS	Listing of duplicate packets found	INT16	(Array of 50)

4.7.3 Per-block Metadata Description

None.

4.7.4 Per-line Metadata Description

None.

4.7.5 Per-pixel (or -sample) Metadata Description

Table 4-12 describes the Per-sample Metadata that are specific to each data sample in a packet during the calibration sequence. For each data value in the motor current SDS there is a corresponding metadata value in the corresponding metadata SDS.

Table 4-12: Motor Data Per-Sample Metadata

PerPacket Metadata	Definition	Data Type	Valid Range
Current sample quality indicators	Quality values associated with each motor current sample. Using bit-level triggers the quality flag is toggled as follows: bit 0: Data extraction error bit 1: Data scaling error bit 2: Data byte alignment error bit 3: Data failed threshold check, high bit 4: Data failed threshold check, low bit 5: Unused bit 6: Unused bit 7: Data value is OK.	INT8	(Array of 283)

4.7.6 Swath Data Set Descriptions

For MISR calibration processing the data collected during any of the types of calibration sequence modes (North pole, South pole, Dark, Diode) generates motor data which is stored in the MISR L1A Motor output product. Data quality checks are performed on all current samples and time tags in the packet.

Table 4-13: Motor Data Dimension Descriptions

Dimension	Description	Valid Values
PGE3_TIME_DIMENSION	Unlimited, time tag for each motor packet collected	0 -
PGE3_TIME_XTRACK_DIMENSION	Number of bytes in a motor packet time tag	8
PGE3_DOWN_TRACK_DIMENSION	Unlimited, number of lines acquired during the collection	0 -

	of MISR motor data	
PGE3_CURR_DIMENSION	Number of current sampled acquired	283
PGE3_META_XTRACK_DIMENSION	Number of metadata values per packet	4

Table 4-14: Motor Data Swath Field Definitions

Field Name Parameter Description	Dimension List	Number Type
PGE3_CURR_SAMPLE_TIME_TABLE	PGE3_DOWN_TRACK_DIMENSION, PGE3_TIME_XTRACK_DIMENSION	UINT8
PGE3_PACKET_QUAL_TABLE	PGE3_DOWN_TRACK_DIMENSION	UINT32
PGE3_PACKET_META_TABLE	PGE3_DOWN_TRACK_DIMENSION, PGE3_PACKET_META_XTRACK_DIMENSION	FLOAT32
PGE3_CURR_SAMPLE_TABLE	PGE3_DOWN_TRACK_DIMENSION, PGE3_CURR_DIMENSION	FLOAT32
PGE3_DATA_QUAL_TABLE	PGE3_DOWN_TRACK_DIMENSION, PGE3_CURR_DIMENSION	UINT8

Table 4-15 lists the data fields in the swath based on the location the data has been collected on the instrument. Each represents an SDS in the output MISR motor file.

Table 4-15: Swath Data fields for Motor Data

Field Name	**Description**	**Data Type**	**Valid Range**
PGE3_curr_sample_time_table			
time_days	Time tag -first 16 bits of 64 bit time tag field representing days (array of 2 bytes)	FLOAT32	0 - 65536
time_msec1	Time tag - second 16 bits of 64 bit time tag field representing milliseconds (array of 2 bytes)	FLOAT32	0 - 65536
time_msec2	Time tag - third 16 bits of 64 bit time tag field representing milliseconds (array of 2 bytes)	FLOAT32	0 - 65536
time_micro	Time tag - fourth 16 bits of 64 bit time tag field representing microseconds (array of 2 bytes)	FLOAT32	0 - 1000
PGE3_packet_quality			
qual_indicator	Motor packet data quality indicator Quality values associated with each motor packet. Using bit-level triggers the quality flag is toggled as follows: Bit 0: Packet header has an error Bit 1: Bad packet APID Bit 2: Invalid packet length Bit 3: Bad packet time stamp Bit 4: Packet time out of order Bit 7: Packet sequence number out of order	INT8	0 - 128
PGE3_packet_meta_table			

motor_id	Motor identifier 0 = North cal panel 1 = South cal panel 3 = cover	INT32	0 - 2
motor_temperature	Motor temperature	FLOAT32	-30 to 50
curr_samp_freq	Motor current sampling frequency	FLOAT32	40ms
tot_num_curr_samples	Number of currents samples	INT32	0 -
PGE3_curr_sample_table			
curr_sample	Motor current sample values (array of 283)	FLOAT32	0 - 2110ma
PGE3_data_qual_table			
(Field definitions described Table 4-14			

4.7.7 Per-swath QA Metadata

None

4.8 MISR LEVEL 1A MI1ANAV NAVIGATION DATA

4.8.1 File Metadata Description

None.

4.8.2 Per-swath Metadata Description

Table 4-16: NAVIGATION Per-swath Metadata

Swath Metadata	Definition	Data Type	Valid Values
PGE2_ORBIT_NO	Orbit counter	INT32	1-
PGE2_PATH_NO	Orbit path counter	INT32	1-233
PGE2_START_TIME	Calibration start time	FLOAT64	S/C time
PGE2_STOP_TIME	Calibration stop time	FLOAT64	S/C time
PGE2_NUMBER_OF_PACKETS	Number of Navigation packets	INT32	0 -
PGE2_SWATH_FLAGS	Quality flag for engineering data collection	INT8	1-128
PGE2_OUT_OF_ORDER_PKTS	Listing of out of order packets found	INT16	(Array of 50)
PGE2_DUPLICATE_PKTS	Listing of duplicate packets found	INT16	(Array of 50)

4.8.3 Per-block Metadata Description

None.

4.8.4 Per-line Metadata Description

None.

4.8.5 Per-pixel (or -sample) Metadata Description

The Engineering Data file uses primarily Per-sample Metadata (Table 4-17). Each multiplexer (MUX), or Camera-specific data, retrieved from the instrument is stored in a separate SDS in the output file.

Table 4-17: Navigation Per-Sample Metadata

PerLine Metadata	Definition	Data Type	Valid Range
Navigation values quality indicators	Quality values associated with each navigation data values. Using bit-level triggers the quality flag is toggled as follows: bit 0: Data extraction error bit 1: Data scaling error bit 2: Data byte alignment error bit 3: Data failed threshold check, high bit 4: Data failed threshold check, low bit 5: Unused bit 6: Unused bit 7: Data value is OK.	INT8	(Array of 13)

4.8.6 Swath Data Set Descriptions

For MISR Engineering/navigation data collected during an EOS orbit the data generated is stored in an appropriate SDS in the output product. The navigation data and data quality indicators describing the values are stored in the swath and data dimensions are defined below.

Table 4-18: Navigation Data Dimension Descriptions

Dimension	Description	Valid Values
PGE2_DOWN_TRACK_DIMENSION	Unlimited, number of lines acquired during the collection of MISR engineering data	0 -
PGE2_NAVIGATION_DIMENSION	Navigation sample values	13
PGE2_TIME_DIMENSION	Unlimited, time tag for each engineering packet collected	0 -
PGE2_TIME_ARRAY_DIMENSION	Number of bytes in a engineering/navigation packet time tag	8

Table 4-19: Navigation Data Swath Field Definitions

Field Name Parameter Description	Dimension List	Number Type
Swath NavSwath		
PGE2_PACKET_QUAL	PGE2_DOWN_TRACK_DIMENSION	UINT32
PGE2_NAVIGATION_TABLE	PGE2_DOWN_TRACK_DIMENSION, PGE2_NAVIGATION_DIMENSION	FLOAT32
PGE2_NAVIGATION_QUAL	PGE2_DOWN_TRACK_DIMENSION, PGE2_NAVIGATION_DIMENSION	UINT8
PGE2_TIME_TABLE	PGE2_TIME_DIMENSION, PGE2_TIME_ARRAY_DIMENSION	UINT8

Table 4-20 lists the data fields in the swath based on the location the data has been collected on the instrument. Each represents an SDS in the output MISR navigation file.

Table 4-20: Swath Data Fields for Navigation Data

Field Name	Description	Data Type	Valid Range
PGE2_time_table			
time_days	Time tag -first 16 bits of 64 bit time tag field representing days (array of 2 bytes)	FLOAT32	0 - 65536
time_msec1	Time tag - second 16 bits of 64 bit time tag field representing milliseconds (array of 2 bytes)	FLOAT32	0 - 65536
time_msec2	Time tag - third 16 bits of 64 bit time tag field representing milliseconds (array of 2 bytes)	FLOAT32	0 - 65536
time_micro	Time tag - fourth 16 bits of 64 bit time tag field representing microseconds (array of 2 bytes)	FLOAT32	0 - 1000
PGE2_packet_qual			
qual_indicator	Motor packet data quality indicator Quality values associated with each motor packet. Using bit-level triggers the quality flag is toggled as follows: Bit 0: Virtual data file could not be opened Bit 1: Header file could not be read Bit 2: Header packet count wrong Bit 3: Header spacecraft id wrong Bit 4: Header time stamp wrong Bit 7: Swath OK flag	INT8	0 - 128
PGE2_navigation_table			
x_axis_pos	X-axis position (m)	FLOAT32	$\pm 268 \times 10^6$
y_axis_pos	Y_axis position (m)	FLOAT32	$\pm 268 \times 10^6$
z_axis_pos	Z-axis position (m)	FLOAT32	$\pm 268 \times 10^6$
x_axis_vel	X-axis velocity (m/s)	FLOAT32	$\pm 524 \times 10^3$
y_axis_vel	Y-axis velocity (m/s)	FLOAT32	$\pm 524 \times 10^3$
z_axis_vel	Z-axis velocity (m/s)	FLOAT32	$\pm 524 \times 10^3$

roll_axis_angle	Roll-axis Euler angle (arcsec)	FLOAT32	±2048
pitch_axis_angle	Pitch-axis Euler angle (arcsec)	FLOAT32	±2048
yaw_axis_angle	Yaw-axis Euler angle (arcsec)	FLOAT32	±2048
roll_axis_rate	Roll-axis rotation rate (arcsec/s)	FLOAT32	±1024
pitch_axis_rate	Pitch-axis rotation rate (arcsec/s)	FLOAT32	±1024
yaw_axis_rate	Yaw-axis rotation rate (arcsec/s)	FLOAT32	±1024
PGE2_packet_meta_table			
(Field definitions described Table 4-19)			

4.8.7 Per-swath QA Metadata

None.

4.9 MISR LEVEL 1A MI1AENG1 ENGINEERING DATA

4.9.1 File Metadata Description

None.

4.9.2 Per-swath Metadata Description

Table 4-21: Swath Metadata for Engineering Data File

Swath Metadata	Definition	Data Type	Valid Values
PGE2_ORBIT_NO	Orbit counter	INT32	1-
PGE2_PATH_NO	Orbit path counter	INT32	1-233
PGE2_START_TIME	Calibration start time	FLOAT64	S/C time
PGE2_STOP_TIME	Calibration stop time	FLOAT64	S/C time
PGE2_NUMBER_OF_PACKETS	Number of Engineering packets	INT32	
PGE2_SWATH_FLAGS	Quality flag for engineering data collection	INT8	1-128
PGE2_OUT_OF_ORDER_PKTS	LIsting of out of order packets found	INT16	(Array of 50)
PGE2_DUPLICATE_PKTS	Listing of duplicate packets found	INT16	(Array of 50)

4.9.3 Per-block Metadata Description

None.

4.9.4 Per-line Metadata Description

None.

4.9.5 Per-pixel (or -sample) Metadata Description

The Engineering Data file uses primarily Per-sample Metadata (Table 4-22). Each multiplexer (MUX), or Camera-specific data, retrieved from the instrument is stored in a separate SDS in the output file.

Table 4-22: Engineering Data Per-Sample Metadata

PerLine Metadata	Definition	Data Type	Valid Range
Mux A quality indicators	Quality values associated with each engineering values collected in MUX A. Using bit-level triggers the quality flag is toggled as follows: bit 0: Data extraction error bit 1: Data scaling error bit 2: Data byte alignment error bit 3: Data failed threshold check, high bit 4: Data failed threshold check, low bit 5: Unused bit 6: Unused bit 7: Data value is OK.	INT8	Array of 16, each correlating to an engineering value collected, 0-128
Mux B quality indicators	Quality values associated with each engineering values collected in MUX B. Using bit-level triggers the quality flag is toggled as follows: bit 0: Data extraction error bit 1: Data scaling error bit 2: Data byte alignment error bit 3: Data failed threshold check, high bit 4: Data failed threshold check, low bit 5: Unused bit 6: Unused bit 7: Data value is OK.	INT8	Array of 16, each correlating to an engineering value collected, 0-128
Mux C quality indicators	Quality values associated with each engineering values collected in MUX C. Using bit-level triggers the quality flag is toggled as follows: bit 0: Data extraction error bit 1: Data scaling error bit 2: Data byte alignment error bit 3: Data failed threshold check, high bit 4: Data failed threshold check, low bit 5: Unused bit 6: Unused bit 7: Data value is OK.	INT8	Array of 16, each correlating to an engineering value collected, 0-128
Mux D quality indicators	Quality values associated with each engineering values collected in MUX D. Using bit-level triggers the quality flag	INT8	Array of 16, each correlating to an

	is toggled as follows: bit 0: Data extraction error bit 1: Data scaling error bit 2: Data byte alignment error bit 3: Data failed threshold check, high bit 4: Data failed threshold check, low bit 5: Unused bit 6: Unused bit 7: Data value is OK.		engineering value collected, 0-128
Camera quality indicator	Quality values associated with each Camera engineering data value collected. Using bit-level triggers the quality flag is toggled as follows: bit 0: Data extraction error bit 1: Data scaling error bit 2: Data byte alignment error bit 3: Data failed threshold check, high bit 4: Data failed threshold check, low bit 5: Unused bit 6: Unused bit 7: Data value is OK.	INT8	Array of 16, each correlating to an camera engineering value collected, 0-128 (Note: There are nine occurrences of this data set, one for each camera)
Temperature quality indicator	Quality values associated with each temperature value collected. Using bitlevel triggers the quality flag is toggled as follows: bit 0: Data extraction error bit 1: Data scaling error bit 2: Data byte alignment error bit 3: Data failed threshold check, high bit 4: Data failed threshold check, low bit 5: Unused bit 6: Unused bit 7: Data value is OK.	INT8	Array of 15, each correlating to a temperature value collected, 0-128
Auxiliary quality indicator	Quality values associated with each auxiliary value collected. Using bit-level triggers the quality flag is toggled as follows: bit 0: Data extraction error bit 1: Data scaling error bit 2: Data byte alignment error bit 3: Data failed threshold check, high bit 4: Data failed threshold check, low bit 5: Unused bit 6: Unused bit 7: Data value is OK.	INT8	Array of 13, each correlating to an engineering auxiliary value collected, 0-128

4.9.6 Swath Data Set Descriptions

For MISR Engineering/Navigation data collected during an EOS orbit the data generated is separated by source (MUX,Camera,...) and stored in an appropriate SDS in the output product. Descriptions of the swath and data dimensions are defined below.

Table 4-23: Engineering Data Dimension Descriptions

Dimension	Description	Valid Values
PGE2_DOWN_TRACK_DIMENSION	Unlimited, number of lines acquired during the collection of MISR engineering data	0 -
PGE2_SWITCH_DIMENSION	Limit switch flags in the MISR engineering/ navigation data	10
PGE2_MUX_DIMENSION	Data from the MISR multiplexer's system ESC ADC	16
PGE2_CAMERA_DIMENSION	Data from the MISR camera engineering data	16
PGE2_TEMPERATURE_DIMENSION	Data from the MISR instrument temperature readings	10
PGE2_AUXILARY_DIMENSION	Auxiliary quality flags from MISR eng/nav packet	13
PGE2_TIME_DIMENSION	Unlimited, time tag for each engineering packet collected	0 -
PGE2_TIME_ARRAY_DIMENSION	Number of bytes in a engineering/navigation packet time tag	8

Table 4-24: Engineering Data Swath Field Definitions

Field Name Parameter Description	Dimension List	Number Type
PGE2_PACKET_QUAL	PGE2_DOWN_TRACK_DIMENSION,	UINT8
PGE2_SWITCH_TABLE	PGE2_DOWN_TRACK_DIMENSION, PGE2_SWITCH_DIMENSION	UINT8
PGE2_MUX_1_TABLE	PGE2_DOWN_TRACK_DIMENSION, PGE2_MUX_DIMENSION	FLOAT32
PGE2_MUX_1_QUAL	PGE2_DOWN_TRACK_DIMENSION, PGE2_MUX_DIMENSION	UINT8
PGE2_MUX_B_TABLE	PGE2_DOWN_TRACK_DIMENSION, PGE2_MUX_DIMENSION	FLOAT32
PGE2_MUX_B_QUAL	PGE2_DOWN_TRACK_DIMENSION, PGE2_MUX_DIMENSION	UINT8
PGE2_MUX_C_TABLE	PGE2_DOWN_TRACK_DIMENSION, PGE2_MUX_DIMENSION	FLOAT32
PGE2_MUX_C_QUAL	PGE2_DOWN_TRACK_DIMENSION, PGE2_MUX_DIMENSION	UINT8
PGE2_MUX_D_TABLE	PGE2_DOWN_TRACK_DIMENSION, PGE2_MUX_DIMENSION	FLOAT32
PGE2_MUX_D_QUAL	PGE2_DOWN_TRACK_DIMENSION, PGE2_MUX_DIMENSION	UINT8
PGE2_CAMERA_TABLE	PGE2_DOWN_TRACK_DIMENSION, PGE2_CAMERA_DIMENSION	FLOAT32
PGE2_CAMERA_QUAL	PGE2_DOWN_TRACK_DIMENSION, PGE2_CAMERA_DIMENSION	UINT8
PGE2_CAMERA_TABLE	PGE2_DOWN_TRACK_DIMENSION, PGE2_CAMERA_DIMENSION	FLOAT32
PGE2_CAMERA_QUAL	PGE2_DOWN_TRACK_DIMENSION, PGE2_CAMERA_DIMENSION	UINT8
PGE2_CAMERA_TABLE	PGE2_DOWN_TRACK_DIMENSION,	FLOAT32

	PGE2_CAMERA_DIMENSION	
PGE2_CAMERA_QUAL	PGE2_DOWN_TRACK_DIMENSION, PGE2_CAMERA_DIMENSION	UINT8
PGE2_CAMERA_TABLE	PGE2_DOWN_TRACK_DIMENSION, PGE2_CAMERA_DIMENSION	FLOAT32
PGE2_CAMERA_QUAL	PGE2_DOWN_TRACK_DIMENSION, PGE2_CAMERA_DIMENSION	UINT8
PGE2_CAMERA_TABLE	PGE2_DOWN_TRACK_DIMENSION, PGE2_CAMERA_DIMENSION	FLOAT32
PGE2_CAMERA_QUAL	PGE2_DOWN_TRACK_DIMENSION, PGE2_CAMERA_DIMENSION	UINT8
PGE2_CAMERA_TABLE	PGE2_DOWN_TRACK_DIMENSION, PGE2_CAMERA_DIMENSION	FLOAT32
PGE2_CAMERA_QUAL	PGE2_DOWN_TRACK_DIMENSION, PGE2_CAMERA_DIMENSION	UINT8
PGE2_CAMERA_TABLE	PGE2_DOWN_TRACK_DIMENSION, PGE2_CAMERA_DIMENSION	FLOAT32
PGE2_CAMERA_QUAL	PGE2_DOWN_TRACK_DIMENSION, PGE2_CAMERA_DIMENSION	UINT8
PGE2_CAMERA_TABLE	PGE2_DOWN_TRACK_DIMENSION, PGE2_CAMERA_DIMENSION	FLOAT32
PGE2_CAMERA_QUAL	PGE2_DOWN_TRACK_DIMENSION, PGE2_CAMERA_DIMENSION	UINT8
PGE2_CAMERA_TABLE	PGE2_DOWN_TRACK_DIMENSION, PGE2_CAMERA_DIMENSION	FLOAT32
PGE2_CAMERA_QUAL	PGE2_DOWN_TRACK_DIMENSION, PGE2_CAMERA_DIMENSION	UINT8
PGE2_TEMP_TABLE	PGE2_DOWN_TRACK_DIMENSION, PGE2_TEMPERATURE_DIMENSION	FLOAT32
PGE2_TEMP_QUAL	PGE2_DOWN_TRACK_DIMENSION, PGE2_TEMPERATURE_DIMENSION	UINT8
PGE2_AUXILARY_TABLE	PGE2_DOWN_TRACK_DIMENSION, PGE2_AUXILARY_DIMENSION	INT32
PGE2_AUXILARY_QUAL	PGE2_DOWN_TRACK_DIMENSION, PGE2_AUXILARY_DIMENSION	UINT8
PGE2_TIME_TABLE	PGE2_TIME_DIMENSION, PGE2_TIME_ARRAY_DIMENSION	UINT8

Table 4-25 lists the data fields in the swath based on the location the data has been collected on the instrument. Each represents an SDS in the output MISR engineering file.

Table 4-25: Swath Data Fields for Engineering Data

Field Name	Description	Data Type	Valid Range
PGE2_time_table			
time_days	Time tag -first 16 bits of 64 bit time tag field representing	FLOAT32	0 - 65536

	days (array of 2 bytes)		
time_msec1	Time tag - second 16 bits of 64 bit time tag field representing milliseconds (array of 2 bytes)	FLOAT32	0 - 65536
time_msec2	Time tag - third 16 bits of 64 bit time tag field representing milliseconds (array of 2 bytes)	FLOAT32	0 - 65536
time_micro	Time tag - fourth 16 bits of 64 bit time tag field representing microseconds (array of 2 bytes)	FLOAT32	0 - 1000
Packet_qual			
qual_indicator	Motor packet data quality indicator Quality values associated with each motor packet. Using bit-level triggers the quality flag is toggled as follows: Bit 0: Virtual data file could not be opened Bit 1: Header file could not be read Bit 2: Header packet count wrong Bit 3: Header spacecraft id wrong Bit 4: Header time stamp wrong Bit 7: Swath OK flag	UINT8	0 - 128
Swtich_values		UINT8	
cover_latched	Instrument cover latched	UINT8	0/1
n_cal_pnl_latched	North calibration panel latched	UINT8	0/1
s_cal_pnl_latched	South calibration panel latched	UINT8	0/1
cover_open	Instrument cover open	UINT8	0/1
cover_closed	Instrument cover closed	UINT8	0/1
n_cal_pnl_deploy	North calibration panel deployed	UINT8	0/1
n_cal_pnl_stowed	North calibration panel stowed	UINT8	0/1
s_cal_pnl_deploy	South calibration panel deployed	UINT8	0/1
s_cal_pnl_stowed	South calibration panel stowed	UINT8	0/1
repl_htr1	Replacement heater (1) indicator	UINT8	0/1
repl_htr2;	Replacement heater (1) indicator	UINT8	0/1
MUX A data			
v1_ref_voltage	One volt reference voltage (V)	FLOAT32	0 to 6 volts
v5_ref_voltage	Five volt reference voltage (V)	FLOAT32	0 to 6 volts
goni_diode_temp	Temperature of goniometer PIN (deg C)	FLOAT32	-30 to +50 deg C
pin1_diode_temp	Temperature of PIN1 (deg C)	FLOAT32	-30 to +50 deg C
pin2_diode_temp	Temperature of PIN2 (deg C)	FLOAT32	-30 to +50 deg C
pin3_diode_temp	Temperature of PIN3 (deg C)	FLOAT32	-30 to +50 deg C
pin4_diode_temp	Temperature of PIN4 (deg C)	FLOAT32	-30 to +50 deg C
hqe_blue_green_temp	Temperature of blue (green) HQE (deg C)	FLOAT32	-30 to +50 deg C
red_nir_temp	Temperature of red (NIR) HQE (deg C)	FLOAT32	-30 to +50 deg C
cover_motor_temp	Motor cover temperature (deg C)	FLOAT32	-30 to +50 deg C
cal_pnl_motor_temp	South Cal Panel motor temperature (deg C)	FLOAT32	-30 to +50 deg C
opt_bench_temp	Optical bench control temperature (deg C)	FLOAT32	-30 to +50 deg C
pin2_blue_data	PIN2 blue current (na)	FLOAT32	0.8 to 48 na

pin2_green_data	PIN2 green current (na)	FLOAT32	0.8 to 48 na
pin2_red_data	PIN2 red current (na)	FLOAT32	0.8 to 48 na
pin2_NIR_data	PIN2 NIR current (na)	FLOAT32	0.8 to 48 na
MUX B data			
v1_ref_voltage	One volt reference voltage (V)	FLOAT32	0 to 6 volts
v5_ref_voltage	Five volt reference voltage (V)	FLOAT32	0 to 6 volts
power_sply_current	System power supply current (A)	FLOAT32	-0.0184 to 1.61 amp
cover_motor_current	Cover motor current (ma)	FLOAT32	0 to 2110 ma
goni_pin_blue_data	Goniometer PIN blue current (na)	FLOAT32	0.8 to 48 na
goni_pin_green_data	Goniometer PIN green current (na)	FLOAT32	0.8 to 48 na
goni_pin_red_data	Goniometer PIN red current (na)	FLOAT32	0.8 to 48 na
goni pin_NIR data	Goniometer PIN NIR current (na)	FLOAT32	0.8 to 48 na
pin1_blue_data	PIN1 blue current (na)	FLOAT32	0.8 to 48 na
pin1_green_data	PIN1 green current (na)	FLOAT32	0.8 to 48 na
pin1_red_data	PIN1 red current (na)	FLOAT32	0.8 to 48 na
pin1_NIR_data	PIN1 NIR current (na)	FLOAT32	0.8 to 48 na
opt_bench_temp	Optical bench temperature (deg C)	FLOAT32	-30 to +50 deg C
goni_cover_mtr_temp	Goniometer cover motor temperature (deg C)	FLOAT32	-30 to +50 deg C
cal_pnl_motor_temp	North Cal Panel motor temperature (deg C)	FLOAT32	-30 to +50 deg C
volt_ref_temp	Voltage reference temperature (deg C)	FLOAT32	-30 to +50 deg C
MUX C data			
v1_ref_voltage	One volt reference voltage (V)	FLOAT32	0 to 6 volts
v5_ref_voltage	Five volt reference voltage (V)	FLOAT32	0 to 6 volts
goni_motor_current	Goniometer current (ma)	FLOAT32	o to 2110 ma
tec_pos_x_temp	TECRAD+X temperature (deg C)	FLOAT32	-30 to +50 deg C
pin3_blue_data	PIN3 blue current (na)	FLOAT32	0.8 to 48 na
pin3_green_data	PIN3 green current (na)	FLOAT32	0.8 to 48 na
pin3_red_data	PIN3 red current (na)	FLOAT32	0.8 to 48 na
pin3_NIR_data	PIN3 NIR current (na)	FLOAT32	0.8 to 48 na
pin4_blue_data	PIN4 blue current (na)	FLOAT32	0.8 to 48 na
pin4_green_data	PIN4 green current (na)	FLOAT32	0.8 to 48 na
pin4_red_data	PIN4 red current (na)	FLOAT32	0.8 to 48 na
pin4_NIR_data	PIN4 NIR current (na)	FLOAT32	0.8 to 48 na
el_rad_neg_x_temp	Elec Rad -X temperature (deg C) n_cal_pnl_temp	FLOAT32	-30 to +50 deg C
n_cal_pnl_temp	North Cal Panel temperature (deg C)	FLOAT32	-30 to +50 deg C
s_cal_pnl_temp	South Cal Panel temperature (deg C)	FLOAT32	-30 to +50 deg C
MUX D data			
v1_ref_voltage	One volt reference voltage (V)	FLOAT32	0 to 6 volts
v5_ref_voltage	Five volt reference voltage (V)	FLOAT32	0 to 6 volts
s_cal_pnl_motor_curr	South Cal Panel motor current (ma)	FLOAT32	0 to 2110 ma

v5_logic_monitor	+5V logic monitor voltage (V)	FLOAT32	0 to 6 volts
v28_bus_monitor	+28V bus monitor voltage (V)	FLOAT32	0 to 55.44 volts
v11_bus_monitor	+11V bus monitor voltage (V)	FLOAT32	0 to 22.04 volts
dc_dc_converter_current	DC/DC converter current (A)	FLOAT32	-0.00876 to 2.77 amp
tec_volt_monitor	TEC monitor voltage (V)	FLOAT32	0 to 55.44 volts
hqe_blue_data	Goniometer position (deg)	FLOAT32	0.8 to 48 na
hqe_blue_data	North Cal Panel motor current (ma)	FLOAT32	0.8 to 48 na
hqe_blue_data	HQE blue current (na)	FLOAT32	0.8 to 48 na
hqe_green_data	HQE green current (na)	FLOAT32	0.8 to 48 na
hqe_red_data	HQE red current (na)	FLOAT32	0.8 to 48 na
hqe_nir_data	HQE NIR current (ma)	FLOAT32	0.8 to 48 na
Camera data (9 iterations)			
v1_ref_curr	One volt reference voltage (V)	FLOAT32	0 to 6 volts
v5_ref_curr	Five volt reference voltage (V)	FLOAT32	0 to 6 volts
ccd_fp_temp	CCD focal plane temperature (deg C)	FLOAT32	-30 to +50 deg C
optics_temp1	Optics 1 temperature (deg C)	FLOAT32	-30 to +50 deg C
optics_temp2	Optics 2temperature (deg C)	FLOAT32	-30 to +50 deg C
optics_temp3	Optics 3temperature (deg C)	FLOAT32	-30 to +50 deg C
optics_temp4	Optics 4temperature (deg C)	FLOAT32	-30 to +50 deg C
tec_hot_voltage_temp	TEC hot junction temperature (deg C)	FLOAT32	-30 to +50 deg C
v28_input_current	Input V28 current (ma)	FLOAT32	0 to 587 ma
cam_head_temp	Camera head temperature (deg C)	FLOAT32	-30 to +50 deg C
tec_cold_junc_temp	TEC cold junction temperature (deg C)	FLOAT32	-30 to +50 deg C
pwr_trans_q1_temp	Q1 temperature (deg C)	FLOAT32	-30 to +50 deg C
fp_heater_vltg	Focal plane heater voltage (V)	FLOAT32	-30 to +50 deg C
esc_vref_temp	ESC reference temperature (deg C)	FLOAT32	-30 to +50 deg C
hybrid_temp	Hybrid temperature (deg C)	FLOAT32	-30 to +50 deg C
Auxillary data			
NHK flag		UINT8	
CAM flag		UINT8	
CMD flag		UINT8	
PGE2_packet_meta_table (Field definitions described Table 4-24			

4.9.7 Per-swath QA Metadata

None

4.10 MISR LEVEL 1A MI1AOBC ON-BOARD CALIBRATION DATA

4.10.1 File Metadata Description

None.

4.10.2 Per-swath Metadata Description

Table 4-26: Swath Metadata for OBC Data File

Swath Metadata	Definition	Data Type	Valid Values
PGE5_ORBIT_NO	Orbit counter	INT32	1-
PGE5_PATH_NO	Orbit path counter	INT32	1-233
PGE5_START_TIME	Calibration start time	FLOAT64	S/C time
PGE5_STOP_TIME	Calibration stop time	FLOAT64	S/C time
PGE5_NUM_OBC_SAMPLES	Number of OBC samples	INT32	
PGE5_SWATH_FLAGS	Quality flag for calibration	INT8	1-128
PGE5_OUT_OF_ORDER_PKTS	Listing of out of order packets found	INT16	(Array of 50)
PGE5_DUPLICATE_PKTS	Listing of duplicate packets found	INT16	(Array of 50)

4.10.3 Per-block Metadata Description

None.

4.10.4 Per-line Metadata Description

None.

4.10.5 Per-pixel (or -sample) Metadata Description

Table 4-27 describes the Per-sample Metadata that are specific to each data sample in a packet during the calibration sequence. For each data value in the diode and temperature SDSs there is a corresponding metadata value in a corresponding SDS.

Table 4-27: OBC Data Per-Sample Metadata

PerPacket Metadata	Definition	Data Type	Valid Range
Diode quality indicators	Quality values associated with each diode/ goniometer value collected. Using bit-level triggers the quality flag is toggled as follows: bit 0: Data extraction error	INT8	(Array of 26)

	bit 1: Data scaling error bit 2: Data byte alignment error bit 3: Data failed threshold check, high bit 4: Data failed threshold check, low bit 5: Unused bit 6: Unused bit 7: Data value is OK.		
Temperate quality indicator	Quality values associated with each temperature value collected. Using bit-level triggers the quality flag is toggled as follows: bit 0: Data extraction error bit 1: Data scaling error bit 2: Data byte alignment error bit 3: Data failed threshold check, high bit 4: Data failed threshold check, low bit 5: Unused bit 6: Unused bit 7: Data value is OK.	INT8	(Array of 10)

4.10.6 Swath Data Set Descriptions

For MISR Calibration processing the data collected during any of the types of calibration sequence modes generates On-board calibration data which is stored in an output MISR OBC swath file. Data quality checks are performed on all radiometry, temperatures and time tags in the packets.

Table 4-28: OBC Data Dimension Descriptions

Dimension	Description	Valid Values
PGE5_TIME_DIMENSION	Unlimited, time tag for each engineering packet collected	0 -
PGE5_TIME_ARRAY_DIMENSION	Number of bytes in a engineering/navigation packet time tag	8
PGE5_DOWN_TRACK_DIMENSION	Unlimited, number of OBC samples retrieved during a calibration sequence	0 -
PGE5_RAD_DIMENSION	Radiometry values retrieved during a calibration sequence	26
PGE5_TEMPERATURE_DIMENSION	Diode temperature readings retrieved during a calibration sequence	8

Table 4-29: OBC Data Swath Field Definitions

Field Name Parameter Description	Dimension List	Number Type
Swath OBCSwath		
PGE5_PACKET_QUAL	PGE5_DOWN_TRACK_DIMENSION	UINT32
PGE5_RAD_TABLE	PGE5_DOWN_TRACK_DIMENSION, PGE5_RAD_DIMENSION	FLOAT32
PGE5_RAD_QUAL	PGE5_DOWN_TRACK_DIMENSION, PGE3_RAD_DIMENSION	UINT8

PGE5_TEMP_TABLE	PGE5_DOWN_TRACK_DIMENSION, PGE5_TEMPERATURE_DIMENSION	FLOAT32
PGE5_TEMP_QUAL	PGE5_DOWN_TRACK_DIMENSION, PGE5_TEMPERATURE_DIMENSION	UINT8
PGE5_PKT_TIME_TABLE	PGE5_TIME_DIMENSION, PGE5_TIME_ARRY_DIMENSION	FLOAT32
PGE5_DIODE_TIME_TABLE	PGE5_TIME_DIMENSION, PGE5_TIME_ARRY_DIMENSION	FLOAT32

Table 4-30 lists the data fields in the swath based on the location the data has been collected on the instrument. Each represents an SDS in the output MISR on-board calibration file.

Table 4-30: Swath Data Fields for Level 1A OBC Data

Field Name	Description	Data Type	Valid Range
Packet_time			
time_days	Time tag -first 16 bits of 64 bit time tag field representing days (array of 2 bytes)	FLOAT32	0 - 65536
time_msec1	Time tag - second 16 bits of 64 bit time tag field representing milliseconds (array of 2 bytes)	FLOAT32	0 - 65536
time_msec2	Time tag - third 16 bits of 64 bit time tag field representing milliseconds (array of 2 bytes)	FLOAT32	0 - 65536
time_micro	Time tag - fourth 16 bits of 64 bit time tag field representing microseconds (array of 2 bytes)	FLOAT32	0 - 1000
Temperatures			
Goniometer PIN-diodes temperature	Temperature reading, goniometer PIN diode	FLOAT32	-30 to +50 deg C
#1 PIN-diodes temperature	Temperature reading, #1 PIN diode	FLOAT32	-30 to +50 deg C
#2 PIN-diodes temperature	Temperature reading, #2 PIN diode	FLOAT32	-30 to +50 deg C
#3 PIN-diodes temperature	Temperature reading, #3 PIN diode	FLOAT32	-30 to +50 deg C
#4 PIN-diodes temperature	Temperature reading, #4 PIN diode	FLOAT32	-30 to +50 deg C
Blue-Green HQE diode temperature	Temperature reading, Blue or Green HQE diode	FLOAT32	-30 to +50 deg C
Red-NIR HQE diode temperature	Temperature reading, Red or Near-IR HQE diode	FLOAT32	-30 to +50 deg C
Goniometer motor temperature	Temperature reading, goniometer motor	FLOAT32	-30 to +50 deg C
Temperature_qual			
qual_indicator	Quality values associated with each radiometry value. Using bit-level triggers the quality flag is toggled as follows: bit 0: The data could not be extracted from the raw packet bit 1: The data could not be scaled properly bit 2: The data could not be byte aligned properly	UINT8	0 - 128

	bit 3: The value failed the threshold check high bit 4: The value failed the threshold check low bit 7: The value is OK.		
Diode_time (per diode sample)			
time_days	Time tag -first 16 bits of 64 bit time tag field representing days (array of 2 bytes)	FLOAT32	0 - 65536
time_msec1	Time tag - second 16 bits of 64 bit time tag field representing milliseconds (array of 2 bytes)	FLOAT32	0 - 65536
time_msec2	Time tag - third 16 bits of 64 bit time tag field representing milliseconds (array of 2 bytes)	FLOAT32	0 - 65536
time_micro	Time tag - fourth 16 bits of 64 bit time tag field representing microseconds (array of 2 bytes)	FLOAT32	0 - 1000
Radiometry			
#1 PIN diode (all four bands)	Diode data, #1 PIN diode	FLOAT32	0.8 to 48 na
#2 PIN diode (all four bands)	Diode data, #2 PIN diode	FLOAT32	0.8 to 48 na
#3 PIN diode (all four bands)	Diode data, #3 PIN diode	FLOAT32	0.8 to 48 na
#4 PIN diode (all four bands)	Diode data, #4 PIN diode	FLOAT32	0.8 to 48 na
HQE diode (all four bands)	HQE diode data	FLOAT32	0.8 to 48 na
Goniometer potentiometer voltage	Goniometer potentiometer voltage	FLOAT32	-64.9 to 64.9 deg
Goniometer motor current	Goniometer motor current	FLOAT32	0 to 2110 ma
Radiometry_qual			
qual_indicator	Quality values associated with each radiometry value. Using bit-level triggers the quality flag is toggled as follows: bit 0: The data could not be extracted from the raw packet bit 1: The data could not be scaled properly bit 2: The data could not be byte aligned properly bit 3: The value failed the threshold check high bit 4: The value failed the threshold check low bit 5: The value failed the root sum square check bit 6: The value failed the standard deviation check bit 7: The value is OK.	UINT8	0 - 128

4.10.7 Per-swath QA Metadata

None.

5 MISR LEVEL 1B1 RADIOMETRIC PRODUCT

5.1 MISR LEVEL 1B1 PRODUCT GRANULE NAMES

MISR Level 1B1 Radiometric Data Products are composed of the file granules listed below (Table 5-1).

Table 5-1: MISR Level 1B1 File Granule Names

MISR LEVEL 1B1 FILE GRANULE NAME	ESDT Name	Section
MISR_AM1_RP_GM_Pmmm_Onnnnnn_cc_Fff_vvvv.hdf	MI1B1	5.4
MISR_AM1_RP_LM_Pmmm_Onnnnnn_cc_SITE_<string>_Fff_vvvv.hdf	M1B1LM	see above

5.2 MISR LEVEL 1B1 PRODUCT GRANULE BRIEF DESCRIPTIONS

MISR Level 1B1 (MI1B1) Radiometric Product contains the global mode radiances for an entire swath. The Level 1B1 Local Mode (M1B1LM) Radiometric product is identical in format to the global mode product; however, it contains a small subset of the swath acquired when the instrument was in Local Mode. Local Mode products are not generated for all swaths.

During radiance scaling and conditioning the instrument DN values are converted to spectral radiances and reported in MKS (meter, kilogram, second) units referred to as SI (Système International). Use is made of the camera calibration data, where the response of the system to a known radiance field is quantized. These data represent our best estimate of instrument response, as determined through many different activities conducted both preflight and in-flight. For further details, please refer to section [9.2.4] of the Ancillary Products description.

It is noted that MISR does not provide a radiometric product scaled to the exo-atmospheric solar irradiance. As MISR does not view the Sun directly, such a data set could only be obtained by employing a solar model, and would be of no greater accuracy than the radiance product.

5.3 MISR LEVEL 1B1 PRODUCT GRANULE DATA SETS

The L1B1 products will be produced as two ESDTs, as shown in Table 5-2. Each physical file is in the HDF-EOS Swath format and each contains four Swath datasets corresponding to the four bands of a MISR camera

Table 5-2: Level 1B1 Radiometric Product File and Swath Datasets

ESDT Short-	Local Granule ID[1]	Swath Dataset Name

1 Where Pmmm corresponds to the orbit path number, Onnnnnn is the absolute orbit number, cc is the camera identifier, ff is the format version number and vvvv is the file version number.

name		
MI1B1	MISR_AM1_RP_GM_Pmmm_Onnnnnn_cc_Fff_vvvv.hdf	L1B1_Blue_Product
		L1B1_Green_Product
		L1B1_Red_Product
		L1B1_Nir_Product
M1B1LM	MISR_AM1_RP_LM_Pmmm_Onnnnnn_cc_SITE_<string>_Fff_vvvv.hdf	same 4 bands as above

5.4 MISR LEVEL 1B1 MI1B1 RADIOMETRIC PRODUCT

5.4.1 File Metadata Description.

Table 5-3: Metadata for Radiometric Product Files

Swath Metadata	Definition	Data Type	Valid Values
PathNumber	Orbital path number	INT32	1-233
OrbitNumber	Orbit Number	INT32	1-99,999
Camera	Camera identifier	UINT8	1-9
CameraMode	Camera mode identifier	UINT8	0 = Local Mode 1 = Global Mode
NumLMEvents	Number of Local Mode Acquisitions which occurred during this orbit, regardless of Camera_mode.	INT8	0-6
LMSiteName	The geographical name of the local mode site, if this is a local mode file.	CHAR8	string up to 12 characters, including null.
StartTime	Start time reported in Detailed Activity Schedule	CHAR8	UTC string in CCSDS ASCII Time Code A
StopTime	Stop time reported in Detailed Activity Schedule	CHAR8	UTC string in CCSDS ASCII Time Code A
PGEStartOffset	Time in seconds past DAS_start_time at which to begin PGE processing.	FLOAT64	0.0 - 98.88 min.
PGEStopOffset	Time in seconds since DAS_start_time at which to end PGE processing. (Preempted if DAS_stop_time earlier.)	FLOAT64	0.0 - 98.88 min.
PGEStartTAI	Actual time of first L1B1 line processed. TAI is PGS Toolkit internal time, which is the real number of continuous seconds since UTC 12 am 1-1-1993.	FLOAT64	

5.4.2 Per-swath Metadata Description

For the Radiometric Product, Swath attributes are attached using HDF-EOS calls of the Swath application (Table 5-4).

Table 5-4: Swath Metadata for Radiometric Product Files

Swath Metadata	Definition	Data Type	Valid Values
Rad_scale_factor	Multiplicative Radiometric scale factor to convert stored integer data values to floating point values in SI units.	FLOAT64	
Line_average_mode	Line Average Mode	UINT8	1 = 275 m 4 = 1.1 km
Sample_average_mode	Sample Average Mode	UINT8	1 = 275 m 4 = 1.1 km
Number_Lines_in_Data_Array	Length of HDF-EOS swath array.	INT32	0-100,000
Last_Valid_Data_Line	Last line in this HDF-EOS swath array which actually contains MISR data.	INT32	0-100,000
GM_Line_Where_LM_Begins	In Local Mode products, this field indicates the equivalent line number in the global mode swath of the first local mode line.	INT32	0-100,000
GM_Line_Where_LM_Ends	In Local Mode products, this field indicates the equivalent line number in the global mode swath of the last local mode line.	INT32	0-100,000

5.4.3 Per-line Metadata Description

A scene background correction algorithm is under consideration for use in the MISR Level 1B1 software. This algorithm would remove image ghosts from the MISR radiances. Low intensity ghosting is caused by stray light which can be scattered within the MISR optics. Normally, these artifacts are of negligible brightness. However, in scenes which exhibit very high contrast, this ghosting can introduce a significant radiometric error in some portions of the scene. In order to allow users to reverse this correction, if desired, the Scene Average Radiance for each line is reported in the radiance product. **NOTE: At this time, the background correction algorithm is not being applied to MISR data**.

Table 5-5: Per-line Scene Average for Background Correction

Field Name	Definition	Data Type
L1B1_Line_Scene_Average_Blue	The average radiance value of the 2-D scene centered on the line in question. The scene is defined as a window of 101 lines, 50 above the current line and 50 below it. If the instrument is in 4x4 mode, then the scene is composed of 25 lines, instead. The full active swath width is used in both modes. Scenes are averaged separately by band.	FLOAT32
L1B1_Line_Scene_Average_Green		FLOAT32
L1B1_Line_Scene_Average_Red		FLOAT32
L1B1_Line_Scene_Average_Nir		FLOAT32

5.4.4 Per-pixel Metadata Description

None.

5.4.5 Swath Data Set Descriptions

5.4.5.1 Field dimension and Spatial Resolution descriptions

Table 5-6: Radiometric Product Field Dimension Descriptions

Dimension	Description	Valid Values
Sample	*Sample* is the width of the swath in pixels.	1504 for 275 m parameters 376 for 1.1 km parameters
Line	*Line* is the length of the swath in pixels.	Depends on acquisition length

For the Radiometric Product files, the spatial resolution (and therefore the XDim and YDim) of the different Swaths within the file depend on the averaging mode that band is in for that particular camera. For the nominal Global Mode called "Super Stereo", the following table relates the spatial resolution to camera and band.

Table 5-7: Spatial Resolution Distribution for Global mode

Grid	DF	CF	BF	AF	AN	AA	BA	CA	DA
BlueBand	1.1 km x 1.1 km	1.1 km x 1.1 km	1.1 km x 1.1 km	1.1 km x 1.1 km	275 m x 275 m	1.1 km x 1.1 km	1.1 km x 1.1 km	1.1 km x 1.1 km	1.1 km x 1.1 km
GreenBand	1.1 km x 1.1 km	1.1 km x 1.1 km	1.1 km x 1.1 km	1.1 km x 1.1 km	275 m x 275 m	1.1 km x 1.1 km	1.1 km x 1.1 km	1.1 km x 1.1 km	1.1 km x 1.1 km
RedBand	275 m x 275 m	275 m x 275 m	275 m x 275 m	275 m x 275 m	275 m x 275 m	275 m x 275 m	275 m x 275 m	275 m x 275 m	275 m x 275 m
NIRBand	1.1 km x 1.1 km	1.1 km x 1.1 km	1.1 km x 1.1 km	1.1 km x 1.1 km	275 m x 275 m	1.1 km x 1.1 km	1.1 km x 1.1 km	1.1 km x 1.1 km	1.1 km x 1.1 km

In Local mode, all channels are reported at 275 meter resolution as described in table [5-8].

Table 5-8: Spatial Resolution Distribution for Local mode

Grid	DF	CF	BF	AF	AN	AA	BA	CA	DA
BlueBand	275 m x 275 m	275 m x 275 m	275 m x 275 m	275 m x 275 m	275 m x 275 m	275 m x 275 m	275 m x 275 m	275 m x 275 m	275 m x 275 m
GreenBand	275 m x 275 m	275 m x 275 m	275 m x 275 m	275 m x 275 m	275 m x 275 m	275 m x 275 m	275 m x 275 m	275 m x 275 m	275 m x 275 m
RedBand	275 m x 275 m	275 m x 275 m	275 m x 275 m	275 m x 275 m	275 m x 275 m	275 m x 275 m	275 m x 275 m	275 m x 275 m	275 m x 275 m
NIRBand	275 m x 275 m	275 m x 275 m	275 m x 275 m	275 m x 275 m	275 m x 275 m	275 m x 275 m	275 m x 275 m	275 m x 275 m	275 m x 275 m

The following are flag values used for each parameter. In addition to radiances, the Level 1B1 prod

uct files also contain Data Quality Indicator and Time structures as seen in table [5-10].

Table 5-9: Radiometric Product Parameter Fill Values

L1B1_DQI_[Blue,Green,Red,Nir]	L1B1_Scaled_Rad_[Blue,Green,Red,Nir]	L1B1_Line_TAI_Time_[Blue,Green,Red,Nir]
0 = Within specifications 1 = Reduced accuracy 2 = Not usable for science 3 = Unusable for any purpose	16377 = Gap fill 16378 = Negative discriminant 16379 = Radiance out of range 16380 = Negative radiance	TAI is PGS Toolkit internal time, which is the real number of continuous seconds since UTC 12 am 1-1-1993. -999 = Gap fill

Note: Radiance values are scaled integers in the product file. In order to convert to floating point radiances in the units specified below, multiply Rad_scale_factor (from the Swath Metadata, Table 5-4) by the scaled integer.

Table 5-10: Radiometric Product Parameters Swath Field Definitions

Field Name Parameter Description	Dimension List	Number Type	Units	Transformation	Flag Values
Swath L1B1_Blue_Product (Spatial Resolution: varies, see above)					
L1B1_Scaled_Rad_Blue	Sample,Line	INT16	W m^{-2} sr^{-1} μm^{-1} (scaled)	See note above.	see table [5-9]
L1B1_DQI_Blue	Sample,LIne	UINT8			see table [5-9]
L1B1_Line_TAI_Time_Blue	Line	FLOAT64			see table [5-9]
Swath L1B1_Green_Product (Spatial Resolution: 275 m x 275 m)					
L1B1_Scaled_Rad_Green	Sample,Line	INT16	W m^{-2} sr-^{1} μm^{-1} (scaled)	See note above.	see table [5-9]
L1B1_DQI_Green	Sample,LIne	UINT8			see table [5-9]
L1B1_Line_TAI_Time_Green	Line	FLOAT64			see table [5-9]
Swath L1B1_Red_Product (Spatial Resolution: varies, see above)					
L1B1_Scaled_Rad_Red	Sample,Line	INT16	W m^{-2} sr^{-1} μm^{-1} (scaled)	See note above.	see table [5-9]
L1B1_DQI_Red	Sample,LIne	UINT8			see table [5-9]
L1B1_Line_TAI_Time_Red	Line	FLOAT64			see table [5-9]
Swath L1B1_Nir_Product (Spatial Resolution: varies, see above)					
L1B1_Scaled_Rad_Nir	Sample,Line	INT16	W m^{-2} sr^{-1} μm^{-1} (scaled)	See note above.	see table [5-9]
L1B1_DQI_Nir	Sample,Line	UINT8			see table [5-9]
L1B1_Line_TAI_Time_Nir	Line	FLOAT64			see table [5-9]

5.4.6 Radiometric Product QA Metadata

Additional Quality Assessment Metadata is no longer reported in HDF-EOS vdata structures nor in a separate QA statistics file.

6 MISR LEVEL 1B2 GEORECTIFIED RADIANCE PRODUCT

6.1 MISR LEVEL 1B2 PRODUCT GRANULE NAMES

MISR Level1B2 Georectified Radiance Products are composed of the six file granules listed below (Table 6-1), plus the browse product, which is a JPEG image of the Ellipsoid product. Three additional intermediate granules, the ellipsoid and terrain transform parameters products (TRP), and the registration corrections product (CORR) are described for the sake of completeness; but they may not be available for distribution.

Table 6-1: MISR Level 1B2 File Granule Names

MISR LEVEL 1B2 FILE GRANULE NAME	ESDT Name	Section
MISR_AM1_GRP_ELLIPSOID_GM_Pmmm_Onnnnnn_cc_Fff_vvvv.hdf	MI1B2E	§6.4
MISR_AM1_GRP_ELLIPSOID_LM_Pmmm_Onnnnnn_cc_Fff_vvvv.hdf	MB2LME	§6.4
MISR_AM1_GRP_TERRAIN_GM_Pmmm_Onnnnnn_cc_Fff_vvvv.hdf	MI1B2T	§6.5
MISR_AM1_GRP_TERRAIN_LM_Pmmm_Onnnnnn_cc_Fff_vvvv.hdf	MB2LMT	§6.5
MISR_AM1_GP_GMP_Pmmm_Onnnnnn_Fff_vvvv.hdf	MIB2GEOP	§6.6
MISR_AM1_GRP_RCCM_GM_Pmmm_Onnnnnn_cc_Fff_vvvv.hdf	MIRCCM	§6.7
MISR_AM1_GRP_ELLIPSOID_GM_BR_Pmmm_Onnnnnn_cc_Fff_vvvv .jpg	MISBR	§6.8
MISR_AM1_TRP_ELLIPSOID_Pmmm_Onnnnnn_cc_Fff_vvvv.hdf	MIB2TRPE	§6.9
MISR_AM1_TRP_TERRAIN_Pmmm_Onnnnnn_cc_Fff_vvvv.hdf	MIB2TRPT	§6.10
MISR_AM1_CORR_GM_Pmmm_Onnnnnn_Fff_vvvv.ascii	MIB2CORR	§6.11

6.2 MISR LEVEL 1B2 GEORECTIFIED RADIANCE PRODUCT GRANULE BRIEF DESCRIPTIONS

The Level 1B2 Georectified Radiance Product (GRP) consists of six parameter sets with certain kinds of geometric corrections and have been projected to a Space-Oblique Mercator (SOM) map grid. First, the ellipsoid-projected TOA radiance global mode (GM) parameter uses supplied spacecraft position and pointing and is not corrected for topography, but is resampled to the reference ellipsoid. This global mode parameter is averaged onboard the spacecraft to 1.1 km x 1.1 km resolution in the off-nadir, non-red-band channels. Second, over specific targets, called local mode sites, the ellipsoid-projected local mode (LM) TOA radiance is reported at 275 m x 275 m resolution in all channels. Third, the terrain-projected TOA radiance global mode parameter has had a geometric correction applied which removes the errors of spacecraft position and pointing knowledge and errors due to topography. The parameter is then ortho-rectified on a reference ellipsoid at the surface. This global mode parameter is averaged to 1.1 km x 1.1 km resolution in the off-nadir, non-red-band channels. Fourth, over specific targets, called local mode sites, the terrain-projected local mode (LM) TOA radiance is reported at 275 m x 275 m resolution in all channels. The parameters defined so far also carry a Radiometric Data Quality Indicator (RDQI) associated with each measurement. Fifth, there are the geometric parameters which measure the sun and view angles at

the reference ellipsoid.

Retrieval of aerosol and surface properties within MISR Aerosol/Surface SDP processing requires the absence of clouds in order that the assumptions inherent in the retrievals are not invalidated. Thus, one more parameter is part of this product: the radiometric camera-by-camera cloud mask (RCCM). It is used for several purposes during MISR geophysical parameter retrievals within the TOA/Cloud Product processing. A data quality flag and a glitter mask are also carried for this parameter.

6.3 MISR LEVEL 1B2 GEORECTIFIED RADIANCE PRODUCT GRANULE DATA SETS

The Georectified Radiance Product will be produced as six separate ESDTs, each with one physical file (Table 6-2). Each physical file is in the HDF-EOS Grid "stacked-block" format and each contains one or more HDF-EOS Grid datasets, corresponding to parameters at certain spatial resolutions. The grid datasets will have the usual HDF x and y dimensions, as well as a third dimension corresponding to the SOM block number. The x and y dimensions will correspond to the number of samples in the along-track and cross-track directions, respectively. The blocks that make up the Georectified Radiance Product files are identical to the blocks that make up the Ancillary Geographic Product.

Table 6-2: Level 1B2 Georectified Radiance Product Files and Grid Datasets

ESDT Shortname	Local Granule ID[1]	Grid Dataset Name
MI1B2E	MISR_AM1_GRP_ELLIPSOID_GM_Pmmm_Onnnnnn_cc_Fff_vv vv.hdf	NIRBand
		RedBand
		GreenBand
		BlueBand
		BRF Conversion Factors
		GeometricParameters
MB2LME	MISR_AM1_GRP_ELLIPSOID_LM_Pmmm_Onnnnnn_cc_Fff_vv vv.hdf	NIRBand
		RedBand
		GreenBand
		BlueBand
MI1B2T	MISR_AM1_GRP_TERRAIN_GM_Pmmm_Onnnnnn_cc_Fff_vvv v.hdf	NIRBand
		RedBand

1 Where Pmmm corresponds to the orbit path number, Onnnnnn is the absolute orbit number, cc is the camera identifier, ff is the file format version and vvvv is the version number (which relates to the reprocessing of a dataset with different software and/or ancillary inputs).

		GreenBand
		BlueBand
		BRF Conversion Factors
		GeometricParameters
MB2LMT	MISR_AM1_GRP_TERRAIN_LM_Pmmm_Onnnnnn_cc_Fff_vvvv .hdf	NIRBand
		RedBand
		GreenBand
		BlueBand
MIB2GEOP	MISR_AM1_GP_GMP_Pmmm_Onnnnnn_Fff_vvvv.hdf	Geometric Parameters
MIRCCM MISQA MIANRCCH	MISR_AM1_GRP_RCCM_GM_Pmmm_Onnnnnn_cc_Fff_vvvv.hdf MISR_AM1_GRP_RCCM_QA_GM_Pmmm_Onnnnnn_cc_Fff_vvvv.hdf MISR_AM1_GRP_RCCH_GM_Pmmm_Onnnnnn_cc_Fff_vvvv.hdf	RCCM NotApplicable NotApplicable
MIRCCMF MISQAFq MIRCCHF	MISR_AM1_GRP_RCCM_FIRSTLOOK_GM_Pmmm_Onnnnnn_cc_Fff_vvvv.hdf MISR_AM1_GRP_RCCM_FIRSTLOOK_QA_GM_Pmmm_Onnnnnn_cc_Fff_vvvv.hdf MISR_AM1_GRP_RCCH_FIRSTLOOK_GM_Pmmm_Onnnnnn_cc_Fff_vvvv.hdf	RCCM NotApplicable NotApplicable

As of version F03_0024 there is also a Preliminary Georectified Radiance Product (PGRP) it follows the same format as described below for GRP. The difference between the two is the PGRP does not include the additional improvements to georectification, co-registration, and the Geometric Data Quality Indicators (GDQI). These preliminary products are used as input to the software program which calculates the registration corrections described in section 6.11. After use the PGRP does not remain persistent in the archive, and therefore is not available for distribution.

6.4 MISR LEVEL 1B2 MI1B2E AND MB2LME ELLIPSOID-PROJECTED PRODUCTS

6.4.1 File Metadata Description

Table 6-3: File Metadata for Ellipsoid-projected TOA Radiance Files

File Metadata Field Name	Definition	Data Type	Units	Valid Range
Path_number	Orbit path number	INT32	N/A	1-233
AGP_version_id	Version Identifier for Ancillary Geographic Product	INT32	N/A	2
DID_version_id	Version Identifier for DID (DTED [Digital Terrain Elevation Dataset] Intermediate Dataset)	INT32	N/A	4

Number_blocks	Total number of blocks	INT32	N/A	1-180
Ocean_blocks_size	Ocean_blocks.number dimension	INT32	N/A	1-180
Ocean_blocks.count	Total number of blocks containing entirely ocean radiances	INT32	N/A	1-180
Ocean_blocks.numbers	List of block numbers containing entirely ocean radiances	INT32	N/A	1-180
SOM_parameters.som_ellipsoid.a	Semimajor axis of ellipsoid	FLOAT64	meters	WGS84
SOM_parameters.som_ellipsoid.e2	Eccentricity of ellipsoid squared	FLOAT64	N/A	WGS84
SOM_parameters.som_orbit.aprime	Semimajor axis of orbit	FLOAT64	meters	Not Used
SOM_parameters.som_orbit.eprime	Eccentricity of orbit	FLOAT64	N/A	Not Used
SOM_parameters.som_orbit.gama	Longitude of perigee	FLOAT64	radians	Not Used
SOM_parameters.som_orbit.nrev	Number of revolutions	INT32	N/A	233
SOM_parameters.som_orbit.ro	Radius of circular orbit	FLOAT64	meters	7078040.8
SOM_parameters.som_orbit.i	Inclination of orbit	FLOAT64	radians	1.7157253
SOM_parameters.som_orbit.P2P1	Ratio of time of revolution over length of Earth rotation/orbit	FLOAT64	N/A	0.0068666667
SOM_parameters.som_orbit.lambda0	Geodetic longitude of ascending node at time 0	FLOAT64	radians	0 – 2π
Origin_block.ulc.x	SOM X coordinate (in meters) of the upper left corner of the first block	FLOAT64	meters	6 million to 33 million
Origin_block.ulc.y	SOM Y coordinate (in meters) of the upper left corner of the first block	FLOAT64	meters	+/- 12 million
Origin_block.lrc.x	SOM X coordinate (in meters) of the lower right corner of the first block	FLOAT64	meters	6 million to 33 million
Origin_block.lrc.y	SOM Y coordinate (in meters) of the lower right corner of the first block	FLOAT64	meters	+/- 12 million
Start_block	The block number in the AGP which corresponds to the first block in this file containing data.	INT32	N/A	1 - 180 Start_block < End block
End block	The block number in the AGP which corresponds to the last block in this file containing data.	INT32	N/A	1 - 180 Start_block < End block
Cam_mode	Indicates whether the data in this grid file were obtained in MISR global mode or local mode.	INT32	N/A	0-1 1 = global 0 = local
Num_local_modes	The number of MISR local mode acquisitions contained in this file.	INT32	N/A	0-1 0 if data is global mode

Local_mode_site_name	The geographical name of the local mode site contained in this file for local mode files; null string for global mode files.	CHAR8	N/A	string up to 12 characters in length, including null
Orbit_QA	Indication of the overall quality of the orbit data based on analysis of quality flags in the spacecraft attitude and ephemeris data. Geolocation accuracy may be impaired for orbits with poor quality orbit data.	FLOAT32	N/A	-9999.0 = NoRetrieval, -1.0 = Poor, 0.0 = Nominal
Camera	Indicator of MISR camera	INT32	N/A	Df = 1 Cf = 2 Bf = 3 Af = 4 An = 5 Aa = 6 Ba = 7 Ca = 8 Da = 9

6.4.2 Per-grid Metadata Description

Table 6-4: Per-grid Metadata for Ellipsoid-projected TOA Radiance Grids

Common Grid Metadata	Definition	Data Type	Valid Values
Block_size.resolution_x	Resolution of block x dimension in meters	INT32	275, 1100
Block_size.resolution_y	Resolution of block y dimension in meters	INT32	275, 1100
Block_size.size_x	Block x dimension	INT32	512, 128
Block_size.size_y	Block y dimension	INT32	2048, 512

Table 6-5: Per-grid Metadata for Ellipsoid-projected TOA Radiance Grids

Radiance Grid Metadata	Definition	Data Type	Valid Values
Scale factor (Radiometric)	Multiplicative scale factor for converting the stored 14-bit number to radiance in units W m^{-2} sr^{-1} μm^{-1}	FLOAT64	<1
std_solar_wgted_height	$E_0^{std}(b)$[W m^{-2} μm^{-1}], solar irradiances, standardized response weighted	FLOAT32	
SunDistanceAU	Approximate distance in astronomical units between the center of the earth and the center of the sun at the time MISR observes the first valid (non-fill) pixel in the swath. Replicated across bands for convenience; does not vary with band.	FLOAT64	

Table 6-6: Per-grid Metadata for Geometric Parameters and BRF Conversion Factors Grids

Common Grid Metadata	Definition	Data Type	Valid Values

Block_size.resolution_x	Resolution of block x dimension in meters	INT32	17600
Block_size.resolution_y	Resolution of block y dimension in meters	INT32	17600
Block_size.size_x	Block x dimension	INT32	8
Block_size.size_y	Block y dimension	INT32	32

6.4.3 Per-block Metadata Description

Table 6-7: PerBlock Metadata for Ellipsoid-projected TOA Radiance File

PerBlockMetadataCommon	Definition	Data Type	Valid Range
Block_number	Block number with respect to the Ancillary Geographic Product	INT32	1 to180
Ocean_flag	Flag signalling whether the block contains entirely ocean radiances	INT8	0 = block has no ocean or is a mix of ocean and land 1 = block is entirely ocean
Block_coor_ulc_som_meter.x	Upper left corner SOM block x coordinate in meters	FLOAT64	
Block_coor_ulc_som_meter.y	Upper left corner SOM block y coordinate in meters	FLOAT64	
Block_coor_lrc_som_meter.x	Lower right corner SOM block x coordinate in meters	FLOAT64	
Block_coor_lrc_som_meter.y	Lower right corner SOM block y coordinate in meters	FLOAT64	
Data_flag	Flag signalling whether the block contains entirely fill data	INT8	0 = block contains entirely fill data 1 = block contains valid data

PerBlockMetadataRad	Definition	Data Type	Valid Range
number_transform	Number of transforms required for the block. If this number is two, then the following records occur twice.	INT32	Terrain: always 0 Ellipsoid: 0, 1, or 2
transform.ref_time	The time at which line 0 was acquired by the camera, adjusted for instrument corrections to this block.	CHAR8 * 54	
transform.start_line	Defines the starting SOM boundary for which this transform applies relative to the first block in the entire swath.	INT32	
transform.number_line	Defines the ending SOM boundary for which this transform applies.	INT32	
transform.coeff_line[6]	The vector describing the line transform	FLOAT64 * 6	

	coefficients.		
transform.coeff_samp[6]	The vector describing the sample transform coefficients.	FLOAT64 * 6	
transform.som_ctr.x	The x SOM coordinate of the center of the transform area, used in applying the transform.	FLOAT64	
transform.som_ctr.y	The y SOM coordinate of the center of the transform area, used in applying the transform.	FLOAT64	
transform.ipi_adj_sum		FLOAT64	
GDQI	Geometric Data Quality Indicator	FLOAT64	Terrain: -1.0 to 1.0 Ellipsoid: always 0.0

PerBlockMetadataTime	Definition	Data Type	Valid Range
BlockCenterTime	TAI time of the lower right pixel of the center four pixels in the current block, converted to UTC time, and displayed in CCSDS ASCII time code A format. Note: BlockCenterTime may be incorrect for the first and last blocks processed in a swath.	CHAR8 * 28	

6.4.4 Per-line Metadata Description

None.

6.4.5 Per-pixel Metadata Description

None.

6.4.6 Grid Data Set Descriptions

Table 6-8: Ellipsoid-projected Grid Data Set Descriptions

Dimension	Description	Valid Values
SOMBlockDim	*SOMBlockDim* is the number of SOM blocks in the file. The slowest-varying dimension is implicitly the SOM block dimension. It is not shown in the tables below.	180
XDim	*XDim* is the number of lines in a block. The x dimension direction is identical to the standard SOM x dimension.	512 for 275 m parameters 128 for 1.1 km parameters 8 for 17.6 km parameters
YDim	*YDim* is the number of samples in a block. The y dimension direction is identical to the standard SOM y dimension.	2048 for 275 m parameters 512 for 1.1 km parameters 32 for 17.6 km parameters

For the Terrain-projected TOA Radiance and the Ellipsoid-projected TOA Radiance files, the spatial resolution (and therefore the XDim and YDim) of the different Grids within the file depend on the averaging mode that band is in for that particular camera. For local mode the spatial resolution is 275 m x 275 m for all cameras and bands. For the nominal Global Mode , the following table relates the spatial resolution to camera and band.

Table 6-9: Spatial Resolution Distribution for Global mode

Grid	DF	CF	BF	AF	AN	AA	BA	CA	DA
NIRBand	1.1 km x 1.1 km	1.1 km x 1.1 km	1.1 km x 1.1 km	1.1 km x 1.1 km	275 m x 275 m	1.1 km x 1.1 km	1.1 km x 1.1 km	1.1 km x 1.1 km	1.1 km x 1.1 km
RedBand	275 m x 275 m	275 m x 275 m	275 m x 275 m	275 m x 275 m	275 m x 275 m	275 m x 275 m	275 m x 275 m	275 m x 275 m	275 m x 275 m
BlueBand	1.1 km x 1.1 km	1.1 km x 1.1 km	1.1 km x 1.1 km	1.1 km x 1.1 km	275 m x 275 m	1.1 km x 1.1 km	1.1 km x 1.1 km	1.1 km x 1.1 km	1.1 km x 1.1 km
GreenBand	1.1 km x 1.1 km	1.1 km x 1.1 km	1.1 km x 1.1 km	1.1 km x 1.1 km	275 m x 275 m	1.1 km x 1.1 km	1.1 km x 1.1 km	1.1 km x 1.1 km	1.1 km x 1.1 km

The following are flag values used for each parameter:

Table 6-10: Ellipsoid-projected TOA Radiance Parameter Fill Values

RDQI	Radiance
0 = Within specifications 1 = Reduced accuracy 2 = Not usable for science 3 = Unusable for any purpose	16378 = SOM location not seen by the camera, i.e., this will occur outside the swath edges and at the top and bottom of the swath 16380 = Radiance unusable due to high RDQI

The following are the parameters that make up the file.

Table 6-11: Ellipsoid-projected Parameters Grid Field Definitions

Field Name Parameter Description	Dimension List	Number Type	Units	Transformation	Flag Values
Grid NIRBand (Spatial Resolution: varies, see above)					
NIR Radiance/RDQI	XDim, YDim	UINT16	Radiance: W m^{-2} sr^{-1} μm^{-1} (scaled) RDQI: none	Bit packed: Bits 0-1 = RDQI Bits 2-15 = Radiance (Bit 0 is LSB)	See above
Grid RedBand (Spatial Resolution: 275 m x 275 m, XDim = 512, YDim = 2048)					
Red Radiance/RDQI	XDim, YDim	UINT16	Radiance: W m^{-2} sr^{-1} μm^{-1} (scaled) RDQI: none	Bit packed: Bits 0-1 = RDQI Bits 2-15 = Radiance (Bit 0 is LSB)	See above

Grid GreenBand (Spatial Resolution: varies, see above)					
Green Radiance/RDQI	XDim, YDim	UINT16	Radiance: W m^{-2} sr^{-1} μm^{-1} (scaled) RDQI: none	Bit packed: Bits 0-1 = RDQI Bits 2-15 = Radiance (Bit 0 is LSB)	See above
Grid BlueBand (Spatial Resolution: varies, see above)					
Blue Radiance/RDQI	XDim, YDim	UINT16	Radiance: W m^{-2} sr^{-1} μm^{-1} (scaled) RDQI: none	Bit packed: Bits 0-1 = RDQI Bits 2-15 = Radiance (Bit 0 is LSB)	See above

The Radiance may be obtained from the Radiance/RDQI by right-shifting 2 bits, then multiplying the result by the Scale factor (radiometric) contained in the Radiance Grid Metadata.

The following are flag values used for the two Geometric Parameters included in the MISR Level 1B2 MI1B2E Ellipsoid-Projected Product.

Table 6-12: Geometric Parameter Fill Values

All Parameters		
-111 = Fill above data	-222 = Fill below data	-333 = Fill IPI invalid
-444 = Fill to side of data	-555 = Fill not processed	-999 = Fill IPI error

The following two Geometric Parameters are included in the MISR Level 1B2 MI1B2E Ellipsoid-Projected Product. See the MISR Level 1B2 MI1B2GEOP Geometric Parameters Product description elsewhere in this section for descriptions of the full set of parameters. The angles reported in the MISR Geometric Parameters product are those conventionally used by the radiative transfer community. Formal definitions of these angles may be found in the Geometric Parameters section of the MISR Level 1 Georectification and Registration Algorithm Theoretical Basis, JPL D-11532. Informal descriptions are given in figures [6-1] and [6-2].

Table 6-13: Geometric Parameters Grid Field Definitions

Field Name	Dimension List	Type	Units	Valid Range	Flag Values
Grid GeometricParameters (Spatial Resolution: 17.6 km x 17.6 km, XDim = 8, YDim = 32)					
SolarAzimuth	XDim, YDim	FLOAT64	degrees	0.0 to 360.0	See above
SolarZenith	XDim, YDim	FLOAT64	degrees	0.0 to 90.0 +	See above

The BRF conversion factor for each band is derived from the following equation:

$(\pi * \text{SunDistanceAU}^2) / (\text{std_solar_wgted_height} * \cos(\text{SolarZenith}))$

This factor can be used to calculate the Bidirectional Reflectance Factor (BRF):

BRF = BRF conversion factor * Radiance

The Radiance may be obtained from the Radiance/RDQI by right-shifting 2 bits, then multiplying the result by the Scale factor (radiometric) contained in the Radiance Grid Metadata.

The BRF Conversion Factors use the same set of fill values as those described above in Table [6-12] "Geometric Parameters Fill Values".

Table 6-14: BRF Conversion Factors Grid Field Definitions

Field Name	Dimension List	Type	Units	Valid Range	Flag Values
Grid BRF Conversion Factors (Spatial Resolution: 17.6 km x 17.6 km, XDim = 8, YDim = 32)					
NIRConversionFactor	XDim, YDim	FLOAT32			
RedConversionFactor	XDim, YDim	FLOAT32			
GreenConversionFactor	XDim, YDim	FLOAT32			
BlueConversionFactor	XDim, YDim	FLOAT32			

6.4.7 Per-grid QA Metadata

Table 6-15: Ellipsoid-projected Per-grid QA metadata

Indicator Description	Field Name	HDF Structure	Range	bite size	Mult
Swath-level Indicators		*Swath Vgrp*			
Starting Block number of valid QA range	StartBlock	Type: INT32 Vdata: Global	1 - 180	4	1
Ending Block number of valid QA range	EndBlock	Type: INT32 Vdata: Global	1 - 180	4	1
Total number of samples gen erated	SampTotal	Type: INT32 Vdata: Band/ Mode	0 - 148,897,792	4	4
Total number of non-outside samples generated	SampNoFill	Type: INT32 Vdata: Band/ Mode	0 - 148,897,792	4	4
Number of non-outside sam ples generated with RDQI = 0	SampNoFillDqi0	Type: INT32 Vdata: Band/ Mode	0 - 148,897,792	4	4
Number of non-outside sam ples generated with RDQI = 1	SampNoFillDqi1	Type: INT32 Vdata: Band/ Mode	0 - 148,897,792	4	4
Number of non-outside sam ples generated with RDQI = 2	SampNoFillDqi2	Type: INT32 Vdata: Band/ Mode	0 - 148,897,792	4	4
Number of non-outside sam ples generated with RDQI = 3	SampNoFillDqi3	Type: INT32 Vdata: Band/ Mode	0 - 148,897,792	4	4
*** sample in: 1x1 = 275m x 275m 2x2 = 550m x 550m 1x4 = 275m x 1.1km 4x4 = 1.1km x 1.1km**					

6.5 MISR LEVEL 1B2 MI1B2T AND MB2LMT TERRAIN-PROJECTED PRODUCTS

6.5.1 File Metadata Description

Table 6-16: File Metadata for Terrain-projected TOA Radiance Files

File Metadata Field Name	Definition	Data Type	Units	Valid Range
Path_number	Orbit path number	INT32	N/A	1-233
AGP_version_id	Version Identifier for Ancillary Geographic Product	INT32	N/A	2
DID_version_id	Version Identifier for DID (DTED [Digital Terrain Elevation Dataset] Intermediate Dataset)	INT32	N/A	4
Number_blocks	Total number of blocks	INT32	N/A	1-180
Ocean_blocks_size	Ocean_blocks.number dimension	INT32	N/A	1-180
Ocean_blocks.count	Total number of blocks containing entirely ocean radiances	INT32	N/A	1-180
Ocean_blocks.numbers	List of block numbers containing entirely ocean radiances	INT32	N/A	1-180
SOM_parameters.som_ellipsoid.a	Semimajor axis of ellipsoid	FLOAT64	meters	WGS84
SOM_parameters.som_ellipsoid.e2	Eccentricity of ellipsoid squared	FLOAT64	N/A	WGS84
SOM_parameters.som_orbit.aprime	Semimajor axis of orbit	FLOAT64	meters	Not Used
SOM_parameters.som_orbit.eprime	Eccentricity of orbit	FLOAT64	N/A	Not Used
SOM_parameters.som_orbit.gama	Longitude of perigee	FLOAT64	radians	Not Used
SOM_parameters.som_orbit.nrev	Number of revolutions	INT32	N/A	233
SOM_parameters.som_orbit.ro	Radius of circular orbit	FLOAT64	meters	7078040.8
SOM_parameters.som_orbit.i	Inclination of orbit	FLOAT64	radians	1.7157253
SOM_parameters.som_orbit.P2P1	Ratio of time of revolution over length of Earth rotation/orbit	FLOAT64	N/A	0.0068666667
SOM_parameters.som_orbit.lambda0	Geodetic longitude of ascending node at time 0	FLOAT64	radians	$0 – 2\pi$
Origin_block.ulc.x	SOM X coordinate (in meters) of the upper left corner of the first block	FLOAT64	meters	6 million to 33 million
Origin_block.ulc.y	SOM Y coordinate (in meters) of the upper left corner of the first block	FLOAT64	meters	+/- 12 million

Origin_block.lrc.x	SOM X coordinate (in meters) of the lower right corner of the first block	FLOAT64	meters	6 million to 33 million
Origin_block.lrc.y	SOM Y coordinate (in meters) of the lower right corner of the first block	FLOAT64	meters	+/- 12 million
Start_block	The block number in the AGP which corresponds to the first block in this file containing data.	INT32	N/A	1 - 180 Start_block < End block
End block	The block number in the AGP which corresponds to the last block in this file containing data.	INT32	N/A	1 - 180 Start_block < End block
Cam_mode	Indicates whether the data in this grid file were obtained in MISR global mode or local mode.	INT32	N/A	0-1 1 = global 0 = local
Num_local_modes	The number of MISR local mode acquisitions contained in this file.	INT32	N/A	0-1 0 if data is global mode
Local_mode_site_name	The geographical name of the local mode site contained in this file for local mode files; null string for global mode files.	CHAR8	N/A	string up to 12 characters in length, including null
Orbit_QA	Indication of the overall quality of the orbit data based on analysis of quality flags in the spacecraft attitude and ephemeris data. Geolocation accuracy may be impaired for orbits with poor quality orbit data.	FLOAT32	N/A	-9999.0 = NoRetrieval, -1.0 = Poor, 0.0 = Nominal
Camera	Indicator of MISR camera	INT32	N/A	Df = 1 Cf = 2 Bf = 3 Af = 4 An = 5 Aa = 6 Ba = 7 Ca = 8 Da = 9

6.5.2 Per-grid Metadata Description

Table 6-17: Per-grid Metadata for Terrain-projected TOA Radiance Grids

Common Grid Metadata	Definition	Data Type	Valid Values
Block_size.resolution_x	Resolution of block x dimension in meters	INT32	275, 1100
Block_size.resolution_y	Resolution of block y dimension in meters	INT32	275, 1100
Block_size.size_x	Block x dimension	INT32	512, 128
Block_size.size_y	Block y dimension	INT32	2048, 512

Table 6-18: Per-grid Metadata for Terrain-projected TOA Radiance Grids

Radiance Grid Metadata	Definition	Data Type	Valid Values
Scale factor (Radiometric)	Multiplicative scale factor for converting the stored 14-bit number to radiance in units W m^{-2} sr^{-1} μm^{-1}	FLOAT64	<1
std_solar_wgted_height	$E_0^{std}(b)$ [W m^{-2} μm^{-1}], solar irradiances, standardized response weighted	FLOAT32	
SunDistanceAU	Approximate distance in astronomical units between the center of the earth and the center of the sun at the time MISR observes the first valid (non-fill) pixel in the swath. Replicated across bands for convenience; does not vary with band.	FLOAT64	

Table 6-19: Per-grid Metadata for Geometric Parameters and BRF Conversion Factors Grids

Common Grid Metadata	Definition	Data Type	Valid Values
Block_size.resolution_x	Resolution of block x dimension in meters	INT32	17600
Block_size.resolution_y	Resolution of block y dimension in meters	INT32	17600
Block_size.size_x	Block x dimension	INT32	8
Block_size.size_y	Block y dimension	INT32	32

6.5.3 Per-block Metadata Description

Table 6-20: Per-block Metadata for Terrain-projected TOA Radiance File

PerBlockMetadataCommon	Definition	Data Type	Valid Range
Block_number	Block number with respect to the Ancillary Geographic Product	INT32	1-180
Ocean_flag	Flag signalling whether the block contains entirely ocean radiances	INT8	0 = block has no ocean or is a mix of ocean and land 1 = block is entirely ocean
Block_coor_ulc_som_meter.x	Upper left corner SOM block x coordinate in meters	FLOAT64	
Block_coor_ulc_som_meter.y	Upper left corner SOM block y coordinate in meters	FLOAT64	
Block_coor_lrc_som_meter.x	Lower right corner SOM block x coordinate in meters	FLOAT64	
Block_coor_lrc_som_meter.y	Lower right corner SOM block y coordinate in meters	FLOAT64	
Data_flag	Flag signalling whether the block contains	INT8	0 = block contains

	entirely fill data		entirely fill data 1 = block contains valid data

PerBlockMetadataRad	Definition	Data Type	Valid Range
number_transform	Number of transforms required for the block. If this number is two, then the following records occur twice.	INT32	Terrain: always 0 Ellipsoid: 0, 1, or 2
transform.ref_time	The time at which line 0 was acquired by the camera, adjusted for instrument corrections to this block.	CHAR8 * 54	
transform.start_line	Defines the starting SOM boundary for which this transform applies relative to the first block in the entire swath.	INT32	
transform.number_line	Defines the ending SOM boundary for which this transform applies.	INT32	
transform.coeff_line[6]	The vector describing the line transform coefficients.	FLOAT64 * 6	
transform.coeff_samp[6]	The vector describing the sample transform coefficients.	FLOAT64 * 6	
transform.som_ctr.x	The x SOM coordinate of the center of the transform area, used in applying the transform.	FLOAT64	
transform.som_ctr.y	The y SOM coordinate of the center of the transform area, used in applying the transform.	FLOAT64	
transform.ipi_adj_sum		FLOAT64	
GDQI	Geometric Data Quality Indicator	FLOAT64	Terrain: -1.0 - 1.0 Ellipsoid: always 0.0

PerBlockMetadataTime	Definition	Data Type	Valid Range
BlockCenterTime	TAI time of the lower right pixel of the center four pixels in the current block, converted to UTC time, and displayed in CCSDS ASCII time code A format. Note: Uses a flag value of "0000-00-00T00:00:00.000000Z" to indicate blocks where data for the center of the block wasn't acquired (i.e., partial blocks at the start and end of the swath)	CHAR8 * 28	

6.5.4 Per-line Metadata Description

None.

6.5.5 Per-pixel Metadata Description

None.

6.5.6 Grid Data Set Descriptions

Table 6-21: Terrain-projected Grid Data Set Descriptions

Dimension	Description	Valid Values
SOMBlockDim	*SOMBlockDim* is the number of SOM blocks in the file. The slowest-varying dimension is implicitly the SOM block dimension. It is not shown in the tables below.	180
XDim	*XDim* is the number of lines in a block. The x dimension direction is identical to the standard SOM x dimension.	512 for 275 m parameters 128 for 1.1 km parameters 8 for 17.6 km parameters
YDim	*YDim* is the number of samples in a block. The y dimension direction is identical to the standard SOM y dimension.	2048 for 275 m parameters 512 for 1.1 km parameters 32 for 17.6 km parameters

For the Terrain-projected TOA Radiance and the Ellipsoid-projected TOA Radiance files, the spatial resolution (and therefore the XDim and YDim) of the different Grids within the file depend on the averaging mode that band is in for that particular camera. For local mode the spatial resolution is 275 m x 275 m for all cameras and bands. For the nominal Global Mode, the following table relates the spatial resolution to camera and band.

Table 6-22: Spatial Resolution Distribution for Global mode

Grid	DF	CF	BF	AF	AN	AA	BA	CA	DA
NIRBand	1.1 km x 1.1 km	1.1 km x 1.1 km	1.1 km x 1.1 km	1.1 km x 1.1 km	275 m x 275 m	1.1 km x 1.1 km	1.1 km x 1.1 km	1.1 km x 1.1 km	1.1 km x 1.1 km
RedBand	275 m x 275 m	275 m x 275 m	275 m x 275 m	275 m x 275 m	275 m x 275 m	275 m x 275 m	275 m x 275 m	275 m x 275 m	275 m x 275 m
BlueBand	1.1 km x 1.1 km	1.1 km x 1.1 km	1.1 km x 1.1 km	1.1 km x 1.1 km	275 m x 275 m	1.1 km x 1.1 km	1.1 km x 1.1 km	1.1 km x 1.1 km	1.1 km x 1.1 km
GreenBand	1.1 km x 1.1 km	1.1 km x 1.1 km	1.1 km x 1.1 km	1.1 km x 1.1 km	275 m x 275 m	1.1 km x 1.1 km	1.1 km x 1.1 km	1.1 km x 1.1 km	1.1 km x 1.1 km

The following are flag values used for each parameter.

Table 6-23: Terrain-projected TOA Radiance Parameter Fill Values

RDQI	Radiance
0 = Within specifications 1 = Reduced accuracy 2 = Not usable for science	16377 = SOM location obscured by topography. 16378 = SOM location not seen by the camera, i.e., this will occur outside the swath edges and at the top and bottom of the swath

3 = Unusable for any purpose	16379 = SOM location is over ocean. Blocks which contain no land whatsoever are altered to contain only fill data. This is a measure taken to save space, and it is unique to Terrain files. Refer to the corresponding Ellipsoid-Projected Radiance file for ocean radiance in these cases. 16380 = Radiance unusable due to high RDQIs

The following are the parameters that make up the file.

Table 6-24: Terrain-projected Parameters Grid Field Definitions

Field Name Parameter Description	Dimension List	Number Type	Units	Transformation	Flag Values
Grid NIRBand (Spatial Resolution: varies, see above)					
NIR Radiance/RDQI	XDim, YDim	UINT16	Radiance: W m^{-2} sr^{-1} μm^{-1} (scaled) RDQI: none	Bit packed: Bits 0-1 = RDQI Bits 2-15 = Radiance (Bit 0 is LSB)	See above
Grid RedBand (Spatial Resolution: 275 m x 275 m, XDim = 512, YDim = 2048)					
Red Radiance/RDQI	XDim, YDim	UINT16	Radiance: W m^{-2} sr^{-1} μm^{-1} (scaled) RDQI: none	Bit packed: Bits 0-1 = RDQI Bits 2-15 = Radiance (Bit 0 is LSB)	See above
Grid GreenBand (Spatial Resolution: varies, see above)					
Green Radiance/RDQI	XDim, YDim	UINT16	Radiance: W m^{-2} sr^{-1} μm^{-1} (scaled) RDQI: none	Bit packed: Bits 0-1 = RDQI Bits 2-15 = Radiance (Bit 0 is LSB)	See above
Grid BlueBand (Spatial Resolution: varies, see above)					
Blue Radiance/RDQI	XDim, YDim	UINT16	Radiance: W m^{-2} sr^{-1} μm^{-1} (scaled) RDQI: none	Bit packed: Bits 0-1 = RDQI Bits 2-15 = Radiance (Bit 0 is LSB)	See above

The Radiance may be obtained from the Radiance/RDQI by right-shifting 2 bits, then multiplying the result by the Scale factor (radiometric) contained in the Radiance Grid Metadata.

The following are flag values used for the two Geometric Parameters included in the MISR Level 1B2 MI1B2T Terrain-Projected Product.

Table 6-25: Geometric Parameter Fill Values

All Parameters		
-111 = Fill above data	-222 = Fill below data	-333 = Fill IPI invalid
-444 = Fill to side of data	-555 = Fill not processed	-999 = Fill IPI error

The following two Geometric Parameters are included in the MISR Level 1B2 MI1B2T Terrain-Projected Product. See the MISR Level 1B2 MI1B2GEOP Geometric Parameters Product description elsewhere in this section for descriptions of the full set of parameters. The angles reported in the MISR Geometric Parameters product are those conventionally used by the radiative transfer community. Formal definitions of these angles may be found in the Geometric Parameters section of the MISR Level 1 Georectification and Registration Algorithm Theoretical Basis, JPL D-11532. Informal descriptions are given in figures [6-1] and [6-2].

Table 6-26: Geometric Parameters Grid Field Definitions

Field Name	Dimension List	Type	Units	Valid Range	Flag Values
Grid GeometricParameters (Spatial Resolution: 17.6 km x 17.6 km, XDim = 8, YDim = 32)					
SolarAzimuth	XDim, YDim	FLOAT64	degrees	0.0 to 360.0	See above
SolarZenith	XDim, YDim	FLOAT64	degrees	0.0 to 90.0 +	See above

The BRF conversion factor for each band is derived from the following equation:

(π * SunDistanceAU^2) / (std_solar_wgted_height * cos(SolarZenith))

This factor can be used to calculate the Bidirectional Reflectance Factor (BRF):

BRF = BRF conversion factor * Radiance

The Radiance may be obtained from the Radiance/RDQI by right-shifting 2 bits, then multiplying the result by the Scale factor (radiometric) contained in the Radiance Grid Metadata.

The BRF Conversion Factors use the same set of fill values as those described above in Table [6-25] "Geometric Parameters Fill Values".

Table 6-27: BRF Conversion Factors Grid Field Definitions

Field Name	Dimension List	Type	Units	Valid Range	Flag Values
Grid BRF Conversion Factors (Spatial Resolution: 17.6 km x 17.6 km, XDim = 8, YDim = 32)					
NIRConversionFactor	XDim, YDim	FLOAT32			
RedConversionFactor	XDim, YDim	FLOAT32			
GreenConversionFactor	XDim, YDim	FLOAT32			
BlueConversionFactor	XDim, YDim	FLOAT32			

6.5.7 Per-grid QA Metadata

Table 6-28: Terrain-projected Per-grid QA Metadata

Indicator Description	Field Name	HDF Structure	Range	byte	Mult

				size	
Swath-level Indicators *		*Swath Vgrp*			
Total number of samples generated	SampTotal	Type: INT32 Vdata: Band/ Mode	0 - 148,897,792	4	4
Total number of non-outside samples generated	SampNoFill	Type: INT32 Vdata: Band/ Mode	0 - 148,897,792	4	4
Number of non-outside sam ples generated with RDQI = 0	SampNoFillDqi0	Type: INT32 Vdata: Band/ Mode	0 - 148,897,792	4	4
Number of non-outside sam ples generated with RDQI = 1	SampNoFillDqi1	Type: INT32 Vdata: Band/ Mode	0 - 148,897,792	4	4
Number of non-outside sam ples generated with RDQI = 2	SampNoFillDqi2	Type: INT32 Vdata: Band/ Mode	0 - 148,897,792	4	4
Number of non-outside sam ples generated with RDQI = 3	SampNoFillDqi3	Type: INT32 Vdata: Band/ Mode	0 - 148,897,792	4	4
Starting Block number of valid QA range	StartBlock	Type: INT32 Vdata: Global	1 - 180	4	1
Ending Block number of valid QA range	EndBlock	Type: INT32 Vdata: Global	1 - 180	4	1
*** sample in: 1x1 = 275m x 275m 2x2 = 550m x 550m 1x4 = 275m x 1.1km 4x4 = 1.1km x 1.1km**					
Block-level Indicators		Block Vgrps			
Metadata identifying record by block number	BlockNumber	Field: INT32 Vdata: Block	1 - 180	4	180
Metadata distinguishing valid data records	ValidRecord	Field: INT8 Vdata: Block	0=not valid 1=valid	1	180
Number of Grid Cells in this block	NumGridCells	Type: INT32 Vdata: Block	2 - 62	4	180
Projection Parameter Quality Indicator read from the ancil lary PP file	PPQI	Type: FLOAT64 Vdata: Block	0 - 1	8	180
Summary of the block's Geo metric Data Quality	GDQI	Type: FLOAT64 Vdata: Block	-1.0 to 1.0	8	180
GridCell-level Indicators		GridCell Vgrp			*
The Geometric Data Quality Indicator (GDQI) consists of several fields used by GeoCal.		The GC Vgrp contains a GC Vdata for each block which has an unlimited number of GC records of transform quality info for that grid cell.			
Grid Cell Index (may not be implemented yet)	GridCellID	Type: UINT8 Vdata: GridCellQa	0 - 255	1	5,000
Flag representing accuracy of the transform for this grid cell	AccuracyFlag	Type: UINT8 Vdata: GridCellQa	0 = pass 1 = fail 2 = unknown	1	5,000
Flag indicating if this grid cell was subgridded	SubgridFlag	Type: UINT8 Vdata: GridCellQa	0 = no 1 = yes	1	5,000
Level of subgridding at which this grid cell resides	SubgridLevel	Type: INT32 Vdata: GridCellQa	0 - 6	4	5,000
Number of grid points inves tigated as possible matching candidates	PotentialGpts	Type: INT32 Vdata: GridCellQa	0 - 50	4	5,000
Number of potential grid points selected for match ing attempts after meeting certain criteria	CandidateGpts	Type: INT32 Vdata: GridCellQa	0 - 50	4	5,000
Number of grid points detected as	BlunderGpts	Type: INT32	0 - 50	4	5,000

matching blun ders		Vdata: GridCellQa			
Number of successfully matched grid points	MatchedGpts	Type: INT32 Vdata: GridCellQa	0 - 50	4	5,000
Average line correction for matched points	AveCorLine	Type: FLOAT64 Vdata: GridCellQa	- 20 to 20	8	5,000
Average sample correction for matched points	AveCorSample	Type: FLOAT64 Vdata: GridCellQa	- 20 to 20	8	5,000
Standard deviation of aver age line correction	StddevCorLine	Type: FLOAT64 Vdata: GridCellQa	0 - maxflt	8	5,000
Standard deviation of aver age sample correction	StddevCorSamp	Type: FLOAT64 Vdata: GridCellQa	0 - maxflt	8	5,000
Standard deviation of the image to image line trans form	StddevTrmLine	Type: FLOAT64 Vdata: GridCellQa	0 - maxflt	8	5,000
Standard deviation of the image to image sample transform	StddevTrmSamp	Type: FLOAT64 Vdata: GridCellQa	0 - maxflt	8	5,000
*** size multiplier is approximate; each block may have between 2 and 62 grid cells**					

6.6 MISR LEVEL 1B2 MI1B2GEOP GEOMETRIC PARAMETERS PRODUCT

6.6.1 File Metadata Description

Table 6-29: File Metadata for Geometric Parameters Product Files

File Metadata Field Name	Definition	Data Type	Units	Valid Range
Path_number	Orbit path number	INT32	N/A	1-233
AGP_version_id	Version Identifier for Ancillary Geographic Product	INT32	N/A	2
DID_version_id	Version Identifier for DID (DTED [Digital Terrain Elevation Dataset] Intermediate Dataset)	INT32	N/A	4
Number_blocks	Total number of blocks	INT32	N/A	1-180
Ocean_blocks_size	Ocean_blocks.number dimension	INT32	N/A	1-180
Ocean_blocks.count	Total number of blocks containing entirely ocean radiances	INT32	N/A	1-180
Ocean_blocks.numbers	List of block numbers containing entirely ocean radiances	INT32	N/A	1-180
SOM_parameters.som_ellipsoid.a	Semimajor axis of ellipsoid	FLOAT64	meters	WGS84
SOM_parameters.som_ellipsoid.e2	Eccentricity of ellipsoid squared	FLOAT64	N/A	WGS84
SOM_parameters.som_orbit.aprime	Semimajor axis of orbit	FLOAT64	meters	Not Used

SOM_parameters.som_orbit.eprime	Eccentricity of orbit	FLOAT64	N/A	Not Used
SOM_parameters.som_orbit.gama	Longitude of perigee	FLOAT64	radians	Not Used
SOM_parameters.som_orbit.nrev	Number of revolutions	INT32	N/A	233
SOM_parameters.som_orbit.ro	Radius of circular orbit	FLOAT64	meters	7078040.8
SOM_parameters.som_orbit.i	Inclination of orbit	FLOAT64	radians	1.7157253
SOM_parameters.som_orbit.P2P1	Ratio of time of revolution over length of Earth rotation/orbit	FLOAT64	N/A	0.0068666667
SOM_parameters.som_orbit.lambda0	Geodetic longitude of ascending node at time 0	FLOAT64	radians	0 – 2π
Origin_block.ulc.x	SOM X coordinate (in meters) of the upper left corner of the first block	FLOAT64	meters	6 million to 33 million
Origin_block.ulc.y	SOM Y coordinate (in meters) of the upper left corner of the first block	FLOAT64	meters	+/- 12 million
Origin_block.lrc.x	SOM X coordinate (in meters) of the lower right corner of the first block	FLOAT64	meters	6 million to 33 million
Origin_block.lrc.y	SOM Y coordinate (in meters) of the lower right corner of the first block	FLOAT64	meters	+/- 12 million
Start_block	The block number in the AGP which corresponds to the first block in this file containing data.	INT32	N/A	1 - 180 Start_block < End block
End block	The block number in the AGP which corresponds to the last block in this file containing data.	INT32	N/A	1 - 180 Start_block < End block
Cam_mode	Indicates whether the data in this grid file was obtained in MISR global mode or local mode.	INT32	N/A	0-1 1 = global 0 = local
Num_local_modes	The number of MISR local mode acquisitions contained in this file.	INT32	N/A	0-1 0 if data is global mode
Local_mode_site_name	The geographical name of the local mode site contained in this file for local mode files; null string for global mode files.	CHAR8	N/A	string up to 12 characters in length, including null
Orbit_QA	Indication of the overall quality of the orbit data based on analysis of quality flags in the spacecraft attitude and ephemeris data. Geolocation accuracy may be impaired for orbits with poor quality orbit data.	FLOAT32	N/A	-9999.0 = NoRetrieval, -1.0 = Poor, 0.0 = Nominal

6.6.2 Per-grid Metadata Description

Table 6-30: Per-grid Metadata for Geometric Parameters Product Files

Common Grid Metadata	Definition	Data Type	Valid Values
Block_size.resolution_x	Resolution of block x dimension in meters	INT32	17600
Block_size.resolution_y	Resolution of block y dimension in meters	INT32	17600
Block_size.size_x	Block x dimension	INT32	8
Block_size.size_y	Block y dimension	INT32	32

Grid Metadata	Definition	Data Type	Valid Values
SunDistanceAU	Approximate distance in astronomical units between the center of the earth and the center of the sun at the time MISR observes the first valid (non-fill) pixel in the swath.	FLOAT64	

6.6.3 Per-block Metadata Description

Table 6-31: Per-block Metadata for Geometric parameters Product Files

PerBlockMetadataCommon	Definition	Data Type	Valid Range
Block_number	Block number with respect to the Ancillary Geographic Product	INT32	1-180
Ocean_flag	Flag signalling whether the block contains entirely ocean radiances	INT8	0 = block has no ocean or is a mix of ocean and land 1 = block is entirely ocean
Block_coor_ulc_som_meter.x	Upper left corner SOM block x coordinate in meters	FLOAT64	
Block_coor_ulc_som_meter.y	Upper left corner SOM block y coordinate in meters	FLOAT64	
Block_coor_lrc_som_meter.x	Lower right corner SOM block x coordinate in meters	FLOAT64	
Block_coor_lrc_som_meter.y	Lower right corner SOM block y coordinate in meters	FLOAT64	
Data_flag	Flag signalling whether the block contains entirely fill data	INT8	0 = block contains entirely fill data 1 = block contains valid data

PerBlockMetadataGeoParm	Definition	Data Type	Valid Values
SunDistance	Approximate distance in meters between the center of the earth and the center of the sun at the time MISR observes the first valid (non-fill) pixel in the swath. Repeated in all blocks subsequent to the block containing the first valid pixel for convenience; set to 0.0 in all blocks preceding the block containing the first valid pixel.	FLOAT64	

6.6.4 Per-line Metadata Description

None.

6.6.5 Per-pixel Metadata Description

None.

6.6.6 Grid Data Set Descriptions

Table 6-32: Geometric Parameters Product Field Dimension Descriptions

Dimension	Description	Valid Values
SOMBlockDim	*SOMBlockDim* is the number of SOM blocks in the file. The slowest-varying dimension is implicitly the SOM block dimension. It is not shown in the tables below.	180
XDim	*XDim* is the number of lines in a block. The x dimension direction is identical to the standard SOM x dimension.	8 for 17.6 km parameters
YDim	*YDim* is the number of samples in a block. The y dimension direction is identical to the standard SOM y dimension.	32 for 17.6 km parameters

The following are flag values used for each parameter.

Table 6-33: Geometric Parameter Fill Values

All Parameters		
-111 = Fill above data	-222 = Fill below data	-333 = Fill IPI invalid
-444 = Fill to side of data	-555 = Fill not processed	-999 = Fill IPI error

The grid data set consists of the following parameters.

Table 6-34: Geometric Parameters Grid Field Definitions

Field Name	Dimension List	Type	Units	Valid Range	Flag Values
Grid GeometricParameters (Spatial Resolution: 17.6 km x 17.6 km, XDim = 8, YDim = 32)					
SolarAzimuth	XDim, YDim	FLOAT64	degrees	0.0 to 360.0	See above
SolarZenith	XDim, YDim	FLOAT64	degrees	0.0 to 90.0 +	See above
DfAzimuth	XDim, YDim	FLOAT64	degrees	0.0 to 360.0	See above
DfZenith	XDim, YDim	FLOAT64	degrees	0.0 to 90.0	See above
CfAzimuth	XDim, YDim	FLOAT64	degrees	0.0 to 360.0	See above
CfZenith	XDim, YDim	FLOAT64	degrees	0.0 to 90.0	See above
BfAzimuth	XDim, YDim	FLOAT64	degrees	0.0 to 360.0	See above
BfZenith	XDim, YDim	FLOAT64	degrees	0.0 to 90.0	See above
AfAzimuth	XDim, YDim	FLOAT64	degrees	0.0 to 360.0	See above
AfZenith	XDim, YDim	FLOAT64	degrees	0.0 to 90.0	See above
AnAzimuth	XDim, YDim	FLOAT64	degrees	0.0 to 360.0	See above
AnZenith	XDim, YDim	FLOAT64	degrees	0.0 to 90.0	See above
AaAzimuth	XDim, YDim	FLOAT64	degrees	0.0 to 360.0	See above
AaZenith	XDim, YDim	FLOAT64	degrees	0.0 to 90.0	See above
BaAzimuth	XDim, YDim	FLOAT64	degrees	0.0 to 360.0	See above
BaZenith	XDim, YDim	FLOAT64	degrees	0.0 to 90.0	See above
CaAzimuth	XDim, YDim	FLOAT64	degrees	0.0 to 360.0	See above
CaZenith	XDim, YDim	FLOAT64	degrees	0.0 to 90.0	See above
DaAzimuth	XDim, YDim	FLOAT64	degrees	0.0 to 360.0	See above
DaZenith	XDim, YDim	FLOAT64	degrees	0.0 to 90.0	See above
DfScatter	XDim, YDim	FLOAT64	degrees	0.0 to 360.0	See above
DfGlitter	XDim, YDim	FLOAT64	degrees	0.0 to 360.0	See above
CfScatter	XDim, YDim	FLOAT64	degrees	0.0 to 360.0	See above
CfGlitter	XDim, YDim	FLOAT64	degrees	0.0 to 360.0	See above
BfScatter	XDim, YDim	FLOAT64	degrees	0.0 to 360.0	See above
BfGlitter	XDim, YDim	FLOAT64	degrees	0.0 to 360.0	See above
AfScatter	XDim, YDim	FLOAT64	degrees	0.0 to 360.0	See above
AfGlitter	XDim, YDim	FLOAT64	degrees	0.0 to 360.0	See above
AnScatter	XDim, YDim	FLOAT64	degrees	0.0 to 360.0	See above
AnGlitter	XDim, YDim	FLOAT64	degrees	0.0 to 360.0	See above
AaScatter	XDim, YDim	FLOAT64	degrees	0.0 to 360.0	See above
AaGlitter	XDim, YDim	FLOAT64	degrees	0.0 to 360.0	See above
BaScatter	XDim, YDim	FLOAT64	degrees	0.0 to 360.0	See above
BaGlitter	XDim, YDim	FLOAT64	degrees	0.0 to 360.0	See above
CaScatter	XDim, YDim	FLOAT64	degrees	0.0 to 360.0	See above
CaGlitter	XDim, YDim	FLOAT64	degrees	0.0 to 360.0	See above
DaScatter	XDim, YDim	FLOAT64	degrees	0.0 to 360.0	See above
DaGlitter	XDim, YDim	FLOAT64	degrees	0.0 to 360.0	See above

The solar view and camera angles reported in the MISR Geometric Parameters grid data set are those conventionally used by the radiative transfer community. Formal definitions of these angles may be found in the Geometric Parameters section of the MISR Level 1 Georectification and Registration Algorithm Theoretical Basis, JPL D-11532. Terse diagramatic descriptions are given in fig ures [6-1] and [6-2] below.

Scatter and Glitter angles are new additions to the product. Scatter angle is the angle between a vector pointing from the Sun to the observed point and a vector from the observed point to the camera in question. Scatter angles between 0 and 90 degrees indicate forward scattering. Scatter angles between 90 and 180 degrees indicate backward scattering. Glitter angle is the angle between a vector from the observed point to the camera and a vector pointing in the specular reflection direction. Small glitter angles indicate the possibility of observing sun glint. It is a common practice to identify pixels with a glitter angle less than 30 to 40 degrees as sun glint contaminated.

Figure 6-1 Sun Angles

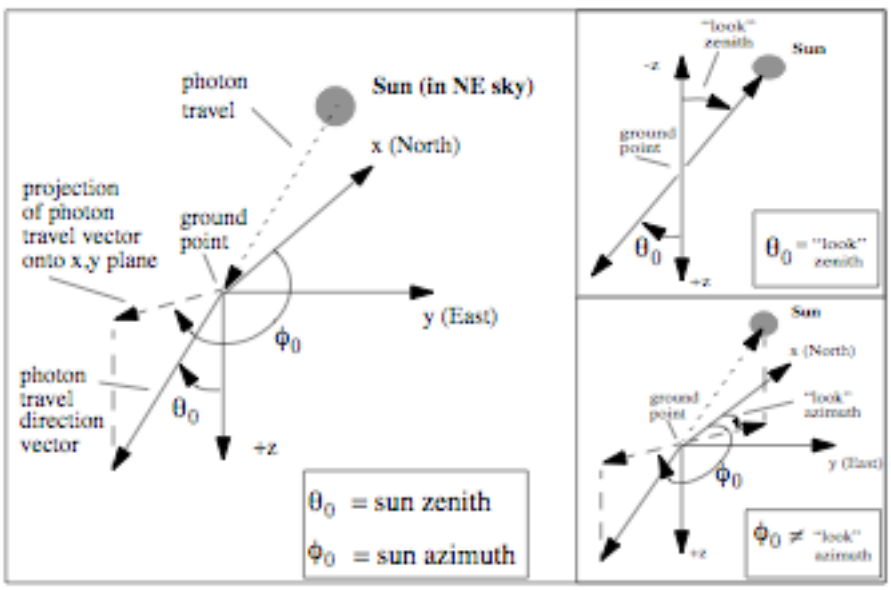

A Cartesian coordinate system is defined in which the +z axis points into the earth, in the direction opposite the ellipsoid normal. The x axis points toward local north. The y axis completes the right-handed coordinate system, pointing east.

Sun Zenith is the angle between the +z axis and a vector anchored at the ground point extending into the earth in the direction of photon travel from the sun. Equivalently, it is the angle between the -z axis and a vector from the ground point to the sun. If the sun is directly overhead, the MISR sun zenith is zero. Values greater than 90 degrees may be reported when the sun is below the horizon for ground points at high latitudes.

Sun Azimuth is the angle measured clockwise from the local north vector to the projection onto the x,y plane of the photon travel direction vector. This "photon travel azimuth" convention differs from the familiar "look azimuth" by 180 degrees. Reported values range between 0 and 360 degrees.

When the sun is due south of the ground point, MISR sun azimuth is 0 degrees.

Figure 6-2 Camera Angles

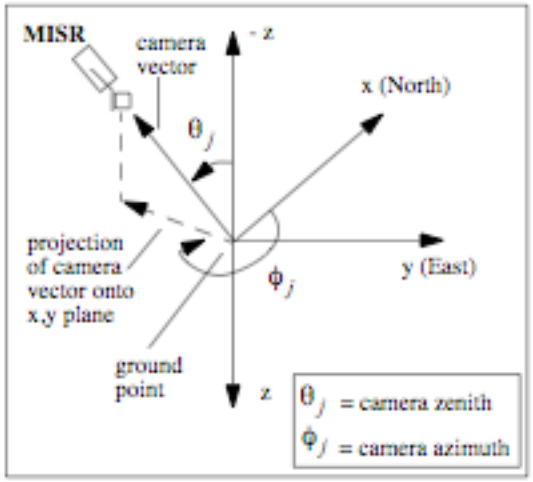

Camera Zenith is the angle between the -z axis and the "camera vector." (The camera vector is anchored at the ground point and is directed toward the camera in the direction of photon travel.) Values range between 0 and 90 degrees.

Camera Azimuth is the angle measured clockwise from the local north vector to the projection onto the x,y plane of the camera vector. Values range between 0 and 360 degrees.

6.6.7 Per-grid QA Metadata

None.

6.7 MISR LEVEL 1B2 MI1B2RCCM RCCM PRODUCT

6.7.1 File Metadata Description

Table 6-35: File Metadata for RCCM Product Files

File Metadata Field Name	Definition	Data Type	Units	Valid Range
Path_number	Orbit path number	INT32	N/A	1-233
AGP_version_id	Version Identifier for Ancillary Geographic Product	INT32	N/A	2
DID_version_id	Version Identifier for DID (DTED [Digital Terrain Elevation Dataset] Intermediate Dataset)	INT32	N/A	4
Number_blocks	Total number of blocks	INT32	N/A	1-180
Ocean_blocks_size	Ocean_blocks.number dimension	INT32	N/A	1-180

Ocean_blocks.count	Total number of blocks containing entirely ocean radiances	INT32	N/A	1-180
Ocean_blocks.numbers	List of block numbers containing entirely ocean radiances	INT32	N/A	1-180
SOM_parameters.som_ellipsoid.a	Semimajor axis of ellipsoid	FLOAT64	meters	WGS84
SOM_parameters.som_ellipsoid.e2	Eccentricity of ellipsoid squared	FLOAT64	N/A	WGS84
SOM_parameters.som_orbit.aprime	Semimajor axis of orbit	FLOAT64	meters	Not Used
SOM_parameters.som_orbit.eprime	Eccentricity of orbit	FLOAT64	N/A	Not Used
SOM_parameters.som_orbit.gama	Longitude of perigee	FLOAT64	radians	Not Used
SOM_parameters.som_orbit.nrev	Number of revolutions	INT32	N/A	233
SOM_parameters.som_orbit.ro	Radius of circular orbit	FLOAT64	meters	7078040.8
SOM_parameters.som_orbit.i	Inclination of orbit	FLOAT64	radians	1.7157253
SOM_parameters.som_orbit.P2P1	Ratio of time of revolution over length of Earth rotation/orbit	FLOAT64	N/A	0.0068666667
SOM_parameters.som_orbit.lambda0	Geodetic longitude of ascending node at time 0	FLOAT64	radians	$0 – 2\pi$
Origin_block.ulc.x	SOM X coordinate (in meters) of the upper left corner of the first block	FLOAT64	meters	6 million to 33 million
Origin_block.ulc.y	SOM Y coordinate (in meters) of the upper left corner of the first block	FLOAT64	meters	+/- 12 million
Origin_block.lrc.x	SOM X coordinate (in meters) of the lower right corner of the first block	FLOAT64	meters	6 million to 33 million
Origin_block.lrc.y	SOM Y coordinate (in meters) of the lower right corner of the first block	FLOAT64	meters	+/- 12 million
Start_block	The block number in the AGP which corresponds to the first block in this file containing data.	INT32	N/A	1 - 180 Start_block < End block
End block	The block number in the AGP which corresponds to the last block in this file containing data.	INT32	N/A	1 - 180 Start_block < End block
Cam_mode	Indicates whether the data in this grid file was obtained in MISR global mode or local mode.	INT32	N/A	0-1 1 = global 0 = local
Num_local_modes	The number of MISR local mode acquisitions contained in this file.	INT32	N/A	0-1 0 if data is global mode
Local_mode_site_name	The geographical name of the local mode site contained in this file for local mode files; null string for global mode files.	CHAR8	N/A	string up to 12 characters in length, including

				null
Orbit_QA	Indication of the overall quality of the orbit data based on analysis of quality flags in the spacecraft attitude and ephemeris data. Geolocation accuracy may be impaired for orbits with poor quality orbit data.	FLOAT32	N/A	-9999.0 = NoRetrieval, -1.0 = Poor, 0.0 = Nominal
Camera	Indicator of MISR camera	INT32	N/A	Df = 1 Cf = 2 Bf = 3 Af = 4 An = 5 Aa = 6 Ba = 7 Ca = 8 Da = 9

6.7.2 Per-grid Metadata Description

Table 6-36: Per-grid Metadata for RCCM Product Files

Common Grid Metadata	Definition	Data Type	Valid Values
Block_size.resolution_x	Resolution of block x dimension in meters	INT32	275, 1100, 17600
Block_size.resolution_y	Resolution of block y dimension in meters	INT32	275, 1100, 17600
Block_size.size_x	Block x dimension	INT32	512, 128, 8
Block_size.size_y	Block y dimension	INT32	2048, 512, 32

6.7.3 Per-block Metadata Description

Table 6-37: Per-block Metadata for RCCM Product Files

PerBlockMetadataCommon	Definition	Data Type	Valid Range
Block_number	Block number with respect to the Ancillary Geographic Product	INT32	1-180
Ocean_flag	Flag signalling whether the block contains entirely ocean radiances	INT8	0 = block has no ocean or is a mix of ocean and land 1 = block is entirely ocean
Block_coor_ulc_som_meter.x	Upper left corner SOM block x coordinate in meters	FLOAT64	
Block_coor_ulc_som_meter.y	Upper left corner SOM block y coordinate in meters	FLOAT64	
Block_coor_lrc_som_me	Lower right corner SOM block x coordinate in meters	FLOAT64	

ter.x			
Block_coor_lrc_som_meter.y	Lower right corner SOM block y coordinate in meters	FLOAT64	
Data_flag	Flag signalling whether the block contains entirely fill data	INT8	0 = block contains entirely fill data 1 = block contains valid data

6.7.4 Per-line Metadata Description

None.

6.7.5 Per-pixel Metadata Description

None.

6.7.6 Grid Data Set Descriptions

Table 6-38: Georectified Radiance Product Field Dimension Descriptions

Dimension	Description	Valid Values
SOMBlockDim	*SOMBlockDim* is the number of SOM blocks in the file. The slowest-varying dimension is implicitly the SOM block dimension. It is not shown in the tables below.	180
XDim	*XDim* is the number of lines in a block. The x dimension direction is identical to the standard SOM x dimension.	512 for 275 m parameters 128 for 1.1 km parameters 8 for 17.6 km parameters
YDim	*YDim* is the number of samples in a block. The y dimension direction is identical to the standard SOM y dimension.	2048 for 275 m parameters 512 for 1.1 km parameters 32 for 17.6 km parameters

For the Terrain-projected TOA Radiance and the Ellipsoid-projected TOA Radiance files, the spatial resolution (and therefore the XDim and YDim) of the different Grids within the file depend on the averaging mode that band is in for that particular camera. For the nominal Global Mode called "Super Stereo", the following table relates the spatial resolution to camera and band.

Table 6-39: Spatial Resolution Distribution for Global mode

Grid	DF	CF	BF	AF	AN	AA	BA	CA	DA
NIRBand	1.1 km x 1.1 km	1.1 km x 1.1 km	1.1 km x 1.1 km	1.1 km x 1.1 km	275 m x 275 m	1.1 km x 1.1 km	1.1 km x 1.1 km	1.1 km x 1.1 km	1.1 km x 1.1 km
RedBand	275 m x 275 m	275 m x 275 m	275 m x 275 m	275 m x 275 m	275 m x 275 m	275 m x 275 m	275 m x 275 m	275 m x 275 m	275 m x 275 m
BlueBand	1.1 km x 1.1 km	1.1 km x 1.1 km	1.1 km x 1.1 km	1.1 km x 1.1 km	275 m x 275 m	1.1 km x 1.1 km	1.1 km x 1.1 km	1.1 km x 1.1 km	1.1 km x 1.1 km

GreenBand	1.1 km x 1.1 km	1.1 km x 1.1 km	1.1 km x 1.1 km	1.1 km x 1.1 km	275 m x 275 m	1.1 km x 1.1 km	1.1 km x 1.1 km	1.1 km x 1.1 km	1.1 km x 1.1 km

The following are the parameters that make up the file.

Table 6-40: RCCM Parameters Grid Field Definitions

Field Name Parameter Description	Dimension List	Number Type	Units	Transformation	Flag Values
Grid RCCM (Spatial Resolution: 1.1 km x 1.1 km, XDim = 128, YDim = 512)					
Cloud Cloud Mask for this pixel.	XDim, YDim	UINT8	none	n/a	0 = no retrieval 1 = Cloud with high confidence 2 = Cloud with low confidence 3 = Clear with low confidence 4 = Clear with high confidence 255 = Fill
Glitter Glitter Mask.	XDim, YDim	UINT8	none	n/a	0 = Not glitter contaminated 1 = Glitter contaminated 255 = Fill
Quality Quality of the cloud mask.	XDim, YDim	UINT8	none	n/a	0 = no retrieval 1 = Secondary test used only 2 = Primary test used only 3 = Both primary and secondary tests used 255 = Fill
Dust_test Dust mask (Only reported over ocean).	XDim, YDim	UINT8	none	n/a	0 = no retrieval 1 = Not Dust (lo test) 2 = Dust (Clear of Clouds) 3 = Not Dust (hi test) 255 = Fill
First Observable Value of the primary observable used in calculating the cloud mask.	XDim, YDim	FLOAT32	diagnostic	n/a	-9999.0 = Fill
Second Observable Value of the secondary observable used in calculating the cloud mask.	XDim, YDim	FLOAT32	diagnostic	n/a	-9999.0 = Fill
Dust Observable Value of the observable used in calculating the dust mask.	XDim, YDim	FLOAT32	diagnostic	n/a	-9999.0 = Fill

6.7.7 Per-grid QA Metadata

Table 6-41: RCCM Per-grid QA Metadata

Indicator Description	Field Name	HDF Structure	Range	byte size	Mult
Swath-level Indicators		*Swath Vgrp*			
Starting Block number of valid QA range	Start_block	Type: INT32 Vdata: Global	1 - 180	4	1
Ending Block number of valid QA range	End_block	Type: INT32 Vdata: Global	1 - 180	4	1
Total number of RCCM's generated	RCCM_total	Type: INT32 Vdata: Global	0 - 9,306,112	4	4
Total number of RCCM's classified Both Primary and Secondary Tests Used	RCCM_both	Type: INT32 Vdata: Global	0 - 9,306,112	4	4
Total number of RCCM's classified Primary Test Used Only	RCCM_primary	Type: INT32 Vdata: Global	0 - 9,306,112	4	4
Total number of RCCM's classified Secondary Test Used Only	RCCM_secondary	Type: INT32 Vdata: Global	0 - 9,306,112	4	4
Total number of RCCM's classified No Retrieval	RCCM_noretrieve	Type: INT32 Vdata: Global	0 - 9,306,112	4	4
Total number of RCCM's classified Not Glitter Con taminated	RCCM_glitter	Type: INT32 Vdata: Global	0 - 9,306,112	4	4
Total number of RCCM's classified Glitter Contami nated	RCCM_noglitter	Type: INT32 Vdata: Global	0 - 9,306,112	4	4

6.8 MISR LEVEL 1B2 MISRBR ELLIPSOID PROJECTED BROWSE PRODUCT

The MISR Ellipsoid Browse product is generated by making a JPEG color image out of the MI1B2E red, green and blue band data. A separate browse product is generated for each of the nine camera views. Each browse product is therefore an image of the entire MISR swath from a particular camera view. In order to limit the size of the browse file to something manageable, the image is sub-sampled and then compressed. Sub-sampling to 2.2km resolution is performed for all bands. Compression is accomplished with the JPEG algorithm at a 75% quality level. The image is also clipped and gamma stretched in order to make cloud, ocean and land features visible. Since the browse product is in the JPEG JFIF file format (.jpg), it contains none of the metadata typically associated with a MISR product. The image itself does contain graphical corner markers and block number labels to enable a user to locate individual MISR blocks within a browse image.

6.9 MISR LEVEL 1B2 MIB2TRPE ELLIPSOID-PROJECTED

TRANSFORM PARAMETERS PRODUCT

The MISR Ellipsoid-projected Transform Parameters product is essentially an intermediate product that is exchanged between two software programs to help with the generation of the L1B2 Local Mode products. So, this product may not be available for distribution. The Ellipsoid TRP product is generated primarily by copying the file metadata, core metadata, annotations (version history metadata), and block metadata from the 1B2 ellipsoid-projected global mode file and by storing the SOM-to-New georectification transform parameters from the 1B2 ellipsoid global mode processing. In addition, equator-crossing information, level 1B1 extent information, and image coordinate correction (ICC) information are added to the file. The SOM-to-New transform parameters are applied in level 1B2 local mode processing to perform georectification on the level 1B1 radiometrically corrected product, so as to produce the level 1B2 ellipsoid-projected local mode product.

6.9.1 File Metadata Description

See Table 6-3, "File Metadata for Ellipsoid-projected TOA Radiance Files.," on page 96 for all fields other than those described in the following table.

Table 6-42: Additional File Metadata for Ellipsoid-Projected Transform Parameter Files

File Metadata Field Name	Definition	Data Type	Valid Range
equator_crossing.time	Equator-crossing date and time	CHAR8 * 28	
equator_crossing.longitude	Equator-crossing longitude (radians)	FLOAT64	

6.9.2 Per-block Metadata Description

See Table 6-7, "PerBlock Metadata for Ellipsoid-projected TOA Radiance File.," on page 99 for all fields other than those described in the following table.

For each field in L1B1 Extent Per-block Metadata there is one record per block, with four values per record, one value for each band.

Table 6-43: L1B1 Extent Per-block Metadata for Ellipsoid-Projected Transform Parameter Files

PerBlockL1b1Extent	Definition	Data Type	Valid Range
valid	Flag indiciating if extent is valid for this band	INT8 * 4	0 - 1 0 = invalid 1 = valid
resolution	Resolution of min_line and max_line in units of 275-meter pixels	INT32 * 4	1, 4
min_line	Minimum L1B1 line number seen in this block	INT32 * 4	0 - 92159
max_line	Maximum L1B1 line number seen in this block	INT32 * 4	0 - 92159

Table 6-44: GDQI Per-Block Metadata for Ellipsoid-Projected Transform Parameter File

PerBlockMetadataPrelim	Definition	Data Type	Valid Range
GDQI_prelim	Preliminary Geometric Data Quality Indicator. This field pertains to one MISR block prior to the application of post-processing corrections.	FLOAT64	-1.0 to 1.0 continuous -1.0 indicates worst quality. 1.0 indicates best quality.

Table 6-45: ICC Per-Block Metadata for Ellipsoid-Projected Transform Parameter File

PerBlockMetadataPreICC	Definition	Data Type	Valid Range
Prelim_coeff_line	The raw misregistration in along-track direction before smoothing to produce a constant value for the entire orbit.	FLOAT64 * 2	-21.0 to 21.0
Prelim_coeff_sample	The raw misregistration in acrosstrack direction before smoothing to produce a constant value for the entire orbit.	FLOAT64 * 2	-21.0 to 21.0

6.9.3 ICC Per-gridcell Metadata Description

The following table describes the Image Coordinate Correction per-gridcell metadata. For each field for blocks with block numbers >= the start block, there are two records, one for each of the grid cells.

Table 6-46: ICC Per-gridcell Metadata for Ellipsoid-Projected Transform Parameter Files

PerGridCell ICC	Definition	Data Type	Valid Range
block_number	Block number	INT32	1 - 180
grid_cell_index	Grid cell index	INT32	0 - 1
effective_flag	Flag to indicate if ICC is used in georegistration for this grid cell	INT8	0 - 1 0 = not used 1 = used
coeff_line	ICC line transform coefficients	FLOAT64 * 2	
coeff_sample	ICC sample transform coefficients	FLOAT64 * 2	
coeff_line_covariance	Covariance matrix for line transform coefficients	FLOAT64 * 4	
coeff_sample_covariance	Covariance matrix for sample transform coefficients	FLOAT64 * 4	
attitude_model.sensitivity_line	Combined sensitivity in image line to 1 arcsecond of attitude change in yaw, pitch, and roll	FLOAT64	
attitude_model.sensitivity_sample	Combined sensitivity in image sample to 1 arcsecond of attitude change in yaw, pitch, and roll	FLOAT64	
attitude_model.white_noise_drift_bias	Bias of gyro white noise drift, 1 sigma	FLOAT64	
attitude_model.random_walk_drift_bias	Bias of gyro random walk drift, 1 sigma	FLOAT64	

delta_t	Time delta in seconds since the last update to the ICC transform, used to adjust covariance uncertainties	FLOAT64	
sigma_line	Sigma associated with the line correction transform	FLOAT64	
sigma_sample	Sigma associated with the sample correction transform	FLOAT64	

6.9.4 SOM-to-New Per-gridcell and Per-band Metadata Description

The following table describes the SOM-to-New per-gridcell and per-band metadata. For each field for blocks with block numbers >= the start block, there are eight records, one for each of the four bands within each of two grid cells.

Table 6-47: SOM-to-New Per-gridcell and Per-band Metadata for Ellipsoid-Projected Transform Parameter Files

PerGridCellSomToNew	Definition	Data Type	Valid Range
block_number	Block number	INT32	1 - 180
grid_cell_index	Grid cell index	INT32	0 - 1
band_index	Band index	INT32	0 - 3
valid	Flag indicating if SOM-to-new transform is valid for this grid cell and band	INT8	0 - 1 0 = invalid 1 = valid
som_area.start_line	Start line of an SOM area, offset from the first line of block 1, in units of 275-meter pixels	INT32	0 - 92159
som_area.start_sample	Start sample of an SOM area, offset from the leftmost (minimum SOM Y) pixel of the block containing the given range of line coordinates, in units of 275-meter pixels	INT32	0 - 2047
som_area.number_line	Number of lines in an SOM area, in units of 275-meter pixels (range of line coordinates may not span more than one block)	INT32	0, 256
som_area.number_sample	Number of samples in an SOM area, in units of 275-meter pixels	INT32	0, 2048
transform.resolution.line	Line resolution of transform, in units of 275-meter pixels	INT32	1, 4
transform.resolution.sample	Sample resolution of transform, in units of 275-meter pixels	INT32	1, 4
transform.som_ctr.line	SOM center location (line) of the grid cell for which the transform applies, in units of 275-meter pixels	INT32	0 - 92159
transform.som_ctr.sample	SOM center location (sample) of the grid cell for which the transform applies, in units of 275-meter pixels	INT32	0 - 2047
transform.coeff_line	Transform coefficients	FLOAT64 * 6	
transform.coeff_sample	Transform coefficients	FLOAT64 * 6	

6.10 MISR LEVEL 1B2 MIB2TRPT TERRAIN-PROJECTED

TRANSFORM PARAMETERS PRODUCT

The MISR Terrain-projected Transform Parameters product is essentially an intermediate product that is exchanged between two software programs to help with the generation of the L1B2 Local Mode products. So, this product may not be available for distribution. The Terrain TRP product is generated by copying the file metadata, core metadata, annotations (version history metadata), and block metadata from the 1B2 terrain-projected global mode file and by storing the Ref-to-New and Band-to-Band georectification transform parameters from the 1B2 terrain global mode processing. In addition, equator-crossing information, level 1B1 extent information, and image coordinate correction (ICC) information are added to the file. The Ref-to-New and Band-to-Band transform parameters are applied in level 1B2 local mode processing to perform georectification on the level 1B1 radiometrically corrected product, so as to produce the level 1B2 terrain-projected local mode product.

6.10.1 File Metadata Description

See Table 6-16, "File Metadata for Terrain-projected TOA Radiance Files.," on page 105 for all fields other than those described in the following table.

Table 6-48: Additional File Metadata for Terrain-Projected Transform Parameter Files

File Metadata Field Name	Definition	Data Type	Valid Range
equator_crossing.time	Equator-crossing date and time	CHAR8 * 28	
equator_crossing.longitude	Equator-crossing longitude (radians)	FLOAT64	

6.10.2 Per-block Metadata Description

See Table 6-20, "Per-block Metadata for Terrain-projected TOA Radiance File.," on page 108 for all fields other than those described in the following table.

For each field in L1B1 Extent Per-block Metadata there is one record per block, with four values per record, one value for each band.

Table 6-49: L1B1 Extent Per-block Metadata for Terrain-Projected Transform Parameter Files

PerBlockL1b1Extent	Definition	Data Type	Valid Range
valid	Flag indiciating if extent is valid for this band	INT8 * 4	0 - 1 0 = invalid 1 = valid
resolution	Resolution of min_line and max_line in units of 275-meter pixels	INT32 * 4	1, 4
min_line	Minimum L1B1 line number seen in this block	INT32 * 4	0 - 92159
max_line	Maximum L1B1 line number seen in this block	INT32 * 4	0 - 92159

Table 6-50: GDQI Per-Block Metadata for Terrain-Projected Transform Parameter File

PerBlockMetadataPrelim	Definition	Data Type	Valid Range
GDQI_prelim	Preliminary Geometric Data Quality Indicator. This field pertains to one MISR block prior to the application of postprocessing corrections.	FLOAT64	-1.0, -0.5, 0.0, 1.0 -1.0 indicates worst quality. 1.0 indicates best quality.

Table 6-51: ICC Per-Block Metadata for Terrain-Projected Transform Parameter File

PerBlockMetadataPreICC	Definition	Data Type	Valid Range
Prelim_coeff_line	The raw misregistration in along-track direction before smoothing to produce a constant value for the entire orbit.	FLOAT64 * 2	-21.0 to 21.0
Prelim_coeff_sample	The raw misregistration in across-track direction before smoothing to produce a constant value for the entire orbit.	FLOAT64 * 2	-21.0 to 21.0

6.10.3 ICC Per-gridcell Metadata Description

The following table describes the Image Coordinate Correction per-gridcell metadata. For each field for blocks with block numbers >= the start block, there are two records, one for each of the grid cells.

Table 6-52: ICC Per-gridcell Metadata for Terrain-Projected Transform Parameter Files

PerGridCell ICC	Definition	Data Type	Valid Range
block_number	Block number	INT32	1 - 180
grid_cell_index	Grid cell index	INT32	0 - 1
effective_flag	Flag to indicate if ICC is used in georegistration for this grid cell	INT8	0 - 1 0 = not used 1 = used
coeff_line	ICC line transform coefficients	FLOAT64 * 2	
coeff_sample	ICC sample transform coefficients	FLOAT64 * 2	
coeff_line_covariance	Covariance matrix for line transform coefficients	FLOAT64 * 4	
coeff_sample_covariance	Covariance matrix for sample transform coefficients	FLOAT64 * 4	
attitude_model.sensitivity_line	Combined sensitivity in image line to 1 arcsecond of attitude change in yaw, pitch, and roll	FLOAT64	
attitude_model.sensitivity_sample	Combined sensitivity in image sample to 1 arcsecond of attitude change in yaw, pitch, and roll	FLOAT64	
attitude_model.white_noise_drift_bias	Bias of gyro white noise drift, 1 sigma	FLOAT64	

attitude_model.random_walk _drift_bias	Bias of gyro random walk drift, 1 sigma	FLOAT64	
delta_t	Time delta in seconds since the last update to the ICC transform, used to adjust covariance uncertainties	FLOAT64	
sigma_line	Sigma associated with the line correction transform	FLOAT64	
sigma_sample	Sigma associated with the sample correction transform	FLOAT64	

6.10.4 Ref-to-New Per-subgridcell Metadata Description

The following table describes the Ref-to-New per-subgridcell metadata. For each field for blocks containing data (non-ocean blocks which are >= start block and <= end block) there is a record for each of the subgridcells. A block which contains data contains one or two gridcells; each gridcell can contain a variable number of subgridcells.

Table 6-53: Ref-to-New Per-subgridcell Metadata for Terrain-Projected Transform Parameter Files

PerGridCell ICC	Definition	Data Type	Valid Range
block_number	Block number	INT32	1 - 180
grid_cell_index	Grid cell index	INT32	0 - 1
subgrid_index	Subgridcell index	INT32	>= 0
som_area.start_line	Start line of an SOM area, offset from the first line of block 1, in units of 275-meter pixels	INT32	0 - 92159
som_area.start_sample	Start sample of an SOM area, offset from the leftmost (minimum SOM Y) pixel of the block containing the given range of line coordinates, in units of 275-meter pixels	INT32	0 - 2047
som_area.number_line	Number of lines in an SOM area, in units of 275-meter pixels (range of line coordinates may not span more than one block)	INT32	0 - 256
som_area.number_sample	Number of samples in an SOM area, in units of 275-meter pixels	INT32	0 - 2048
transform.coeff_line	Transform coefficients	FLOAT64 * 3	
transform.coeff_sample	Transform coefficients	FLOAT64 * 3	

6.10.5 Band-to-Band Per-gridcell and Per-band Metadata Description

The following table describes the Band-to-Band per-gridcell and per-band metadata. For each field for blocks with block numbers >= the start block, there are eight records, one for each of the four bands within each of two grid cells. The “valid” flag is always set to zero for band 2 (the red band) and for all bands of both grid cells of blocks which are entirely over ocean. For blocks partly over ocean, the “valid” flag is set to zero for all bands of a grid cell which is entirely over ocean.

Table 6-54: Band-toBand Per-gridcell and Per-band Metadata for Terrain-Projected Transform Parameter Files

PerGridCellBandToBand	Definition	Data Type	Valid Range
block_number	Block number	INT32	1 - 180
grid_cell_index	Grid cell index	INT32	0 - 1
band_index	Band index	INT32	0 - 3
valid	Flag indicating if SOM-to-new transform is valid for this grid cell and band	INT8	0 - 1 0 = invalid 1 = valid
som_area.start_line	Start line of an SOM area, offset from the first line of block 1, in units of 275-meter pixels	INT32	0 - 92159
som_area.start_sample	Start sample of an SOM area, offset from the leftmost (minimum SOM Y) pixel of the block containing the given range of line coordinates, in units of 275-meter pixels	INT32	0 - 2047
som_area.number_line	Number of lines in an SOM area, in units of 275-meter pixels (range of line coordinates may not span more than one block)	INT32	0, 256
som_area.number_sample	Number of samples in an SOM area, in units of 275-meter pixels	INT32	0 - 2048
transform.coeff_line	Transform coefficients	FLOAT64 * 4	
transform.coeff_sample	Transform coefficients	FLOAT64 * 2	

6.11 MISR LEVEL 1B2 MIB2CORR REGISTRATION CORRECTIONS PRODUCT

The MISR registration corrections product (CORR) contains block-by-block geometric co-registration errors for each camera relative to the nadir camera in both the sample and line directions. The CORR product is used to improve the georectification and co-registration of the GRP product.

6.11.1 Data Set Description

The Block-Half Diff Flags are unused in Level 1 processing. They were intended to detect when the upper/lower and left/right halves of a block have misregistration values different enough that it probably indicates there is a problem of some kind, most likely that there was an ROI correction in the 2nd half of the block.

Table 6-55: Corrections File

File Metadata Field Name	Definition	Data Type	Units	Valid Range
Blk	Block number	INT32	N/A	1-180
T/E	Terrain/Ellipsoid	CHAR8	N/A	‘T’ or ‘E’
Dir	Direction of offset (Line or Sample)	CHAR8	N/A	String up to 3

				characters in length.
Num	Number of valid points	INT32	N/A	1-180
Df	Df Camera Offset Mean	FLOAT64	pixel	-21.0-21.0
Cf	Cf Camera Offset Meant	FLOAT64	pixel	-21.0-21.0
Bf	Bf Camera Offset Mean	FLOAT64	pixel	-21.0-21.0
Af	Af Camera Offset Mean	FLOAT64	pixel	-21.0-21.0
Aa	Aa Camera Offset Mean	FLOAT64	pixel	-21.0-21.0
Ba	Ba Camera Offset Mean	FLOAT64	pixel	-21.0-21.0
Ca	Ca Camera Offset Mean	FLOAT64	pixel	-21.0-21.0
Da	Da Camera Offset Mean	FLOAT64	pixel	-21.0-21.0
Df	Df Camera Offset Standard Deviation	FLOAT64	pixel	0.0-21.0
Cf	Cf Camera Offset Standard Deviation	FLOAT64	pixel	0.0-21.0
Bf	Bf Camera Offset Standard Deviation	FLOAT64	pixel	0.0-21.0
Af	Af Camera Offset Standard Deviation	FLOAT64	pixel	0.0-21.0
Aa	Aa Camera Offset Standard Deviation	FLOAT64	pixel	0.0-21.0
Ba	Ba Camera Offset Standard Deviation	FLOAT64	pixel	0.0-21.0
Ca	Ca Camera Offset Standard Deviation	FLOAT64	pixel	0.0-21.0
Da	Da Camera Offset Standard Deviation	FLOAT64	pixel	0.0-21.0
Df	Df Block-Half Diff Flag	INT8	N/A	0-1 1 = Ignore Blk 0 = Block OK
Cf	Cf Block-Half Diff Flag	INT8	N/A	0-1 1 = Ignore Blk 0 = Block OK
Bf	Bf Block-Half Diff Flag	INT8	N/A	0-1 1 = Ignore Blk 0 = Block OK
Af	Af Block-Half Diff Flag	INT8	N/A	0-1 1 = Ignore Blk 0 = Block OK
Aa	Aa Block-Half Diff Flag	INT8	N/A	0-1 1 = Ignore Blk 0 = Block OK
Ba	Ba Block-Half Diff Flag	INT8	N/A	0-1 1 = Ignore Blk 0 = Block OK
Ca	Ca Block-Half Diff Flag	INT8	N/A	0-1 1 = Ignore Blk 0 = Block OK
Da	Da Block-Half Diff Flag	INT8	N/A	0-1 1 = Ignore Blk 0 = Block OK

7 MISR LEVEL 2 TOA/CLOUD PRODUCT

7.1 MISR LEVEL 2 TOA/CLOUD PRODUCT GRANULE NAMES

MISR Level 2 TOA/CLOUD Products are composed of the three granules listed below (Table 7-1).

Table 7-1: MISR Level 2 TOA/CLOUD File Granule Names

MISR LEVEL 2 TOA/CLOUD FILE GRANULE NAME	ESDT Name	Section
MISR_AM1_TC_STEREO_Pmmm_Onnnnnn_Fff_vvvv.hdf	MIL2TCST	7.4
MISR_AM1_TC_STEREO_FIRSTLOOK_Pmmm_Onnnnnn_Fff_vvvv.hdf	MIL2TCSF	
MISR_AM1_TC_CLASSIFIERS_Pmmm_Onnnnnn_Fff_vvvv.hdf	MIL2TCCL	7.5
MISR_AM1_TC_CLASSIFIERS_FIRSTLOOK_Pmmm_Onnnnnn_Fff_vvvv.hdf	MIL2TCCF	
MISR_AM1_TC_ALBEDO_Pmmm_Onnnnnn_Fff_vvvv.hdf	MIL2TCAL	7.6
MISR_AM1_TC_ALBEDO_FIRSTLOOK_Pmmm_Onnnnnn_Fff_vvvv.hdf	MIL2TCAF	

7.2 MISR LEVEL 2 TOA/CLOUD PRODUCT GRANULE BRIEF DESCRIPTIONS

The Top-of-Atmosphere/Cloud Product consists of top-of-atmosphere (TOA) radiation information and cloud information, including Reflecting Level Reference Altitude (RLRA), Stereoscopic and Angular Signature Cloud Masks, Cloud Motion Vectors (winds), Stereo-Matching results, parameters referenced to the RLRA, including bidirectional reflectance factors, view obscuration information, and texture indices, regional scene classifiers, cloud and topographic shadow masks, local (2.2-km resolution) albedos referenced to the RLRA, and coarse resolution (35.2-km) restrictive and expansive albedos.

Bidirectional reflectances of clear and cloudy regions obtained by MISR are used to develop anisotropic reflectance models classified by cloud type, determine the spatial and temporal variability of cloud albedo, and validate coarse spatial resolution angular reflectance models generated by other instruments. Automated stereo matching of multi-angle imagery is used to estimate cloud-top elevations and cloud motion vectors, which are then used in turn to establish the RLRA. Physically, the RLRA corresponds to the main reflecting layer, which is typically the tops of bright clouds, or under atmospheric conditions corresponding to clear skies or thin cloud, it is located at the surface. This information, together with morphological characteristics, is used to provide automated classifications of cloud type. In addition, MISR albedos help to obtain a better understanding of the nonlinear scaling between sub-grid and grid scale processes in general circulation models (GCMs).

7.3 MISR LEVEL 2 TOA/CLOUD PRODUCT GRANULE DATA SETS

The product is produced as 3 separate ESDTs, each with one physical file (Table 7-1). Each physical file is in the HDF-EOS Grid “stacked-block” format and contains HDF-EOS Grid datasets, cor-

responding to parameters at 1.1 km, 2.2 km, 17.6 km, 35.2 km, or 70.4 km spatial resolution. The grid datasets have the usual x and y dimensions, as well as a third dimension corresponding to the SOM block number. The x and y dimensions correspond to the number of 1.1 km^2, 2.2 km^2, 17.6 km^2, 35.2 km^2, or 70.4 km^2 regions in the along-track and cross-track directions. For each of the files, the number of blocks in the grid dataset corresponds exactly to the number and location of blocks in the Level 1B2 and Level 2 Aerosol/Surface Product files for the same orbit. Also, the blocks that make up the TOA/Cloud Product files are a direct subset of the blocks that make up the Ancillary Geographic Product.

7.4 DIFFERENCES BETWEEN FIRSTLOOK AND FINAL PROCESSING

The MISR processing stream has now been split up into two parts, "FIRSTLOOK" and "FINAL", to adjust for the new time dependence of the TASC and RCCT ancillary datasets. Both the TASC (Atmospheric and Surface Climatology) and RCCT (Radiometric Camera-by-Camea CloudMask Thresholds) datasets now contain data that is unique to the time period for which the datasets are constructed. The TASC dataset now contains snow-ice and ocean surface wind speed values that are updated on a monthly basis, and the RCCM Thresholds are now derived from the observations for a given 3-month period. Therefore, these datasets cannot be generated until the end of the month or season. Rather than delaying all MISR processing of Level 2 and Level 3 until these datasets are available, the Level 2 and Level 3 data are now produced twice over. These two different runs are given the names "FIRSTLOOK" and "FINAL". The FIRSTLOOK processing uses the TASC from the same month/previous year and the RCCT from the same season in the previous year. When the updated datasets are available, the FINAL processing which uses the correct RCCT and TASC data is run. The FIRSTLOOK products are distinguished by the presence of the "FIRSTLOOK" in the filenames, the FINAL products use the original filenames.

Table 7-2: Level 2 TOA/CLOUD Product Files and Grid Datasets

ESDT Shortname	Local Granule ID[1]	Grid Dataset Name
MIL2TCST MIL2TCSF	MISR_AM1_TC_STEREO_Pmmm_Onnnnnn_Fff_vvvv.hdf MISR_AM1_TC_STEREO_FIRSTLOOK_Pmmm_Onnnnnn_Fff_vvvv.hdf	SubregParams
		RLRAregParams
		DomainParams
MIL2TCCL MIL2TCCF	MISR_AM1_TC_CLASSIFIERS_Pmmm_Onnnnnn_Fff_vvvv .hdf MISR_AM1_TC_CLASSIFIERS_FIRSTLOOK_Pmmm_Onnnnnn_Fff_vvvv .hdf	ASCMParams_1.1_km
		SupportVectorSceneClassifier_1.1km
		CloudClassifiers_2.2_km

1 Where Pmmm corresponds to the orbit path number, Onnnnnn is the absolute orbit number, cc is the camera identifier, ff is the file format version and vvvv is the version number (relating to the reprocessing of a dataset with different software and/or ancillary inputs).

		CloudFractions_17.6_km
		SupportVectorCirrusFraction_17.6_km
		CloudClassifiers_35.2_km
MIL2TCAL MIL2TCAF	MISR_AM1_TC_ALBEDO_Pmmm_Onnnnnn_Fff_vvvv.hdf MISR_AM1_TC_ALBEDO_FIRSTLOOK_Pmmm_Onnnnnn_Fff_vvvv.hdf	AlbedoParameters_35.2_km
		GeometricParameters_17.6_km
		ReflectingLevelParameters_2.2_km

7.5 MISR LEVEL 2 MIL2TCST CLOUD STEREO PRODUCT

7.5.1 File Metadata Description

Table 7-3: File Metadata for Cloud Stereo Product Files

File Metadata Field Name	Definition	Data Type	Units	Valid Range
Path_number	Orbit path number	INT32	N/A	1-233
AGP_version_id	Version identifier for AGP	INT32	N/A	2
DID_version_id	Version Identifier for DID (DTED Digital Terrain Elevation Dataset] Intermediate Dataset)	INT32	N/A	4
Number_blocks	Total number of blocks	INT32	N/A	1-180
Ocean_blocks_size	Ocean_blocks.number dimension	INT32	N/A	1-180
Ocean_blocks.count	Total number of blocks containing entirely ocean radiances	INT32	N/A	1-180
Ocean_blocks.numbers	List of block numbers containing entirely ocean radiances	180 x INT32	N/A	1-180
SOM_parameters.som_ellipsoid.a	Semimajor axis of ellipsoid	FLOAT64	meters	WGS84 ellipsoid (6.3781370E+ 06)
SOM_parameters.som_ellipsoid.e2	Eccentricity of ellipsoid squared	FLOAT64	N/A	WGS84 ellipsoid (6.6943480E-03)
SOM_parameters.som_orbit.aprime	Semimajor axis of orbit	FLOAT64	meters	1.0
SOM_parameters.som_orbit.eprime	Eccentricity of orbit	FLOAT64	N/A	1.0
SOM_parameters.som_orbit.gama	Longitude of perigee	FLOAT64	radians	1.0
SOM_parameters.som_orbit.nrev	Number of revolutions per ground track repeat cycle	INT32	N/A	233

SOM_parameters.som_orbit.ro	Radius of circular orbit	FLOAT64	meters	7.0780408E +06
SOM_parameters.som_orbit.i	Inclination of orbit (degrees)	FLOAT64	radians	1.7157253
SOM_parameters.som_orbit.P2P1	Ratio of time of revolution over length of Earth rotation/orbit	FLOAT64	N/A	6.8666667E -02
SOM_parameters.som_orbit.lambda0	Geodetic longitude of ascending node at time 0 (degrees)	FLOAT64	radians	-2π: 2π
Origin_block.ulc.x	SOM X coordinate (in meters) of the upper left corner of the first block	FLOAT64	meters	
Origin_block.ulc.y	SOM Y coordinate (in meters) of the upper left corner of the first block	FLOAT64	meters	
Origin_block.lrc.x	SOM X coordinate (in meters) of the lower right corner of the first block	FLOAT64	meters	
Origin_block.lrc.y	SOM Y coordinate (in meters) of the lower right corner of the first block	FLOAT64	meters	
Start_block	The block number in the AGP which corresponds to the first block in this file containing data.	INT32	N/A	1 - 180 Start_block < End block
End block	The block number in the AGP which corresponds to the last block in this file containing data.	INT32	N/A	1 - 180 Start_block < End block
Cam_mode	Indicates whether the data in this grid file was obtained in MISR global mode or local mode.	INT32	N/A	0-1 1 = global 0 = local
Num_local_modes	The number of MISR local mode acquisitions contained in this file.	INT32	N/A	0-6 0 if data is global mode
Local_mode_site_name	The geographical name of the first local mode site contained in this file.	CHAR8	N/A	string up to 12 characters in length, including null
Orbit_QA	Indication of the overall quality of the orbit data based on analysis of quality flags in the spacecraft attitude and ephemeris data. Geolocation accuracy may be impaired for orbits with poor quality orbit data.	FLOAT32	N/A	-9999.0 = NoRetrieval, -1.0 = Poor, 0.0 = Nominal
Ndata_fwd_aft_wind_diff	The number of domains with valid wind retrievals in both the fwd and aft directions. Used in calculating the Orbit_qa_wind flag and assessing the coregistration quality for this orbit.	FLOAT32	N/A	-9999.0 = NoRetrieval
Mean_fwd_aft_wind_diff	The mean value of the fwd-aft wind difference calculated across all domains. Too high a value means a systematic misregistration error in the orbit. If |value| > 8m/s, this indicates that the orbit is bad and the winds and BestWindHeight fields should not be used.	FLOAT32	meters/sec	-9999.0 = NoRetrieval
Mean_good_fwd_aft_wind_diff	The mean value of the fwd-aft wind difference for all those domains with winds that passed the	FLOAT32	meters/sec	-9999.0 = NoRetrieval

	quality test. A value close to +/- 5 m/s likely indicates a poor quality orbit.			
Fraction_good_fwd_ aft_wind_diff	The fraction of individual fwd-aft wind differences that failed the quality test. A high number indicates poor coregistration for this orbit. A value <= 10% indicates an orbit that should not be used for Winds and BestWind Heights.	FLOAT32	None	-9999.0 = NoRetrieval, 0.0 - 1.0. = Valid Data
Fraction_bad_gdqis	The fraction of gdqi values that were bad for each of the cameras. If any one camera has more than 75% gdqi values, the coregistration is bad and the orbit should not be used for Winds and BestWind Heights.	9 X FLOAT32	None	-9999.0 = Not Important for this camera 0.0 - 1.0. = Valid Data
Orbit_qa_winds	Indication of the overall quality of the orbit data based on the wind retrievals. A value of -1.0 indicates that the orbit is suspect and that the winds and BestWind Heights should not be used.	FLOAT32	None	-9999.0 = NoRetrieval, -1.0 = Poor, 0.0 = Nominal

7.5.2 Per-grid Metadata Description

Table 7-4: Per-grid Metadata for Cloud Stereo Product Files

Common Grid Metadata	Definition	Data Type	Valid Values
Block_size.resolution_x	Resolution of block x dimension in meters	INT32	1100, 2200, 70400
Block_size.resolution_y	Resolution of block y dimension in meters	INT32	1100, 2200, 70400
Block_size.size_x	Block x dimension	INT32	128, 64, 2
Block_size.size_y	Block y dimension	INT32	512, 256, 8

7.5.3 Per-block Metadata Description

Table 7-5: Per-block Metadata for Cloud Stereo Product Files

PerBlockMetadataCommon	Definition	Data Type	Valid Values
Block_number	Current block number	INT32	1-180
Ocean_flag	Flag signalling whether the block contains entirely ocean radiances	INT8	0 = block has no ocean or is a mix of ocean and land 1 = block is entirely ocean
Block_coor_ulc_som_meter.x	Upper left corner SOM block x coordinate in meters	FLOAT64	

Block_coor_ulc_som_meter.y	Upper left corner SOM block y coordinate in meters	FLOAT64	
Block_coor_lrc_som_meter.x	Lower right corner SOM block x coordinate in meters	FLOAT64	
Block_coor_lrc_som_meter.y	Lower right corner SOM block y coordinate in meters	FLOAT64	
Data_flag	Flag signalling whether the block contains entirely fill data	INT8	0 = block contains entirely fill data 1 = block contains valid data

Common Per Block Metadata	Definition	Data Type	Valid Values
Geometric DQI	Geometric Data Quality Indicator copied from the L1B2 Terrainprojected parameter file.	INT32	-1 to 1

PerBlockMetadataTime	Definition	Data Type	Valid Values
BlockCenterTime	Imaging time for the block center (AN Camera) in UTC.	CHAR8	

7.5.4 Per-line Metadata Description

None.

7.5.5 Per-pixel Metadata Description

None.

7.5.6 Grid Data Set Descriptions

In order to minimize storage for the TOA/Cloud Product, many logical parameters will be packed so that each bit represents a logical value, or some number of bits within a byte or word represent a flag value.

To facilitate the interpretation of scientific data, floating point values are not scaled. Floating point values, and some integer values, may take on a flag value indicating invalid data. Currently, there is only a single flag value of -9999.0, representing missing floating point data. Missing integer data may be represented either by a value of 0 (for flag data) or -9999 (for measured data) or -99 (for measured byte integer data). Note that we may later add more flag values to distinguish the reason that the data are missing (e.g., never computed, arithmetic error, overflow, etc.).

Table 7-6: Cloud Stereo Product Field Dimension Descriptions

Dimension	Description	Valid Values
SOMBlockDim	*SOMBlockDim* is the number of SOM blocks in the file. The slowest-varying dimension is implicitly the SOM block dimension. It is not shown in the tables below.	this can vary, with a typical value being approximately 140
XDim	*XDim* is the number of lines in a block. The x dimension direction is identical to the standard SOM x dimension.	128 for 1.1 km parameters 64 for 2.2 km parameters 8 for 17.6 km parameters 4 for 35.2 km parameters 2 for 70.4 km parameters
YDim	*YDim* is the number of samples in a block. The y dimension direction is identical to the standard SOM y dimension.	512 for 1.1 km parameters 256 for 2.2 km parameters 32 for 17.6 km parameters 16 for 35.2 km parameters 8 for 70.4 km parameters
NCamDim	NCamDim distinguishes the individual nine cameras	1-9. DF=1, CF=2, BF=3, AF=4, AN=5, AA=6, BA=7,CA=8, DA=9
NBandDim	NBandDim distinguishes the individual four camera bands	1-4. Blue=1, Green=2, Red=3, NIR=4.
WindDim	Number of individual cloud-motion (wind) vectors being calculated.	1-2. LowCloudBin = 1, HighCloiudBin = 2.
EWHistogramDim	Number of bins in East-West direction of wind histogram	1-37
NSHistogramDim	Number of bins in North-South direction of wind histogram	1-37
WindYDisparityDim	Number of bins in the across-track (sample) Stereo Disparity Histograms that are part of the Wind-QA.	1-303
WindXDisparityDim	Number of bins in the along-track (line) Stereo Disparity Histograms that are part of the Wind-QA.	1-303

Table 7-7: Cloud Stereo Product Grid Dataset Descriptions

Field Name Parameter Description	Dimension List	Number Type	Units	Transformation	Flag Values
SubregParams (Spatial Resolution: 1.1 km x 1.1 km, XDim = 128, YDim = 512)					
StereoHeight_BestWinds Stereoscopic height determined using the Best Quality Winds only, containing fill when a suitable wind was not available. (Featurereferenced).	XDim,YDim	INT16	m	None	No data=-9999
SDCM_BestWinds Stereoscopically-Derived Cloud Mask derived using the StereoHeight_BestWinds. Contains fill when a suitable wind was not available. (Feature-referenced).	XDim,YDim	UINT8	None	None	No Retrieval=0; CloudHC=1; CloudLC=2; NearSurfaceLC=3; NearSurfaceHC=4
StereoHeight_WithoutWinds Stereoscopic height calculated without a wind correction. (Featurereferenced).	XDim,YDim	INT16	m	None	No data=-9999
SDCM_WithoutWinds Stereoscopically-Derived Cloud Mask derived	XDim,YDim	UINT8	None	None	No Retrieval=0; CloudHC=1;

using the StereoHeight_WithoutWinds. (Feature-referenced).					CloudLC=2; NearSurfaceLC=3; NearSurfaceHC=4
FRRCCM_BestWinds Feature-referenced Radiometric Camera-by-camera Cloud Mask that used the StereoHeight_BestWinds for the projection. Contains fill when a suitable wind not available.	XDim,YDim	UINT8	None	None	No Retrieval=0; CloudHC=1; CloudLC=2; ClearLC=3; ClearHC=4
FRRCCM_WithoutWinds Feature-referenced Radiometric Camera-by-camera Cloud Mask that used the StereoHeight_WithoutWinds for the projection.	XDim,YDim	UINT8	None	None	No Retrieval=0; CloudHC=1; CloudLC=2; ClearLC=3; ClearHC=4
StereoHeightSource_BestWinds Stereoscopic height source flag for the BestWinds field. (Featurereferenced).	XDim,YDim	UINT8	None	None	No Retrieval=0; Preliminary Stereo=1; Surface=2; Default Cloud=3; MODIS=4
StereoOverrideFlag_BestWinds Stereoscopic override flag used in establishing reason for any stereo height overrides in the BestWinds field. (Feature-referenced).	XDim,YDim	UINT8	None	None	No Retrieval = 0 Keep Stereo=1; Above Max=2; Below Surface=3; RCCM Override=4
HeightComparisonCameraUsed_BestWinds Identifier of the camera used in retrieving the StereoHeight_BestWinds (ellipsoid referenced)	XDim,YDim	UINT8	None	None	No Retrieval=0; Df=1; Cf=2; Bf=3; Af=4; An=5; Aa=6; Ba=7; Ca=8; Da=9
StereoHeightSource_WithoutWinds Stereoscopic height source flag for the WithoutWinds field. (Featurereferenced).	XDim,YDim	UINT8	None	None	No Retrieval=0; Preliminary Stereo=1; Surface=2; Default Cloud=3; MODIS=4
StereoOverrideFlag_WithoutWinds Stereoscopic override flag used in establishing reason for any stereo height overrides in the WithoutWinds field. (Feature-referenced).	XDim,YDim	UINT8	None	None	No Retrieval=0; Keep Stereo=1; Above Max=2; Below Surface=3; RCCM Override=4
HeightComparisonCameraUsed_WithoutWinds Identifier of the camera used in retrieving the StereoHeight_WithoutWinds (ellipsoid referenced)	XDim,YDim	UINT8	None	None	No Retrieval=0; Df=1; Cf=2; Bf=3; Af=4; An=5; Aa=6; Ba=7; Ca=8; Da=9
PrelimFRStereoHeight_BestWinds Preliminary stereoscopic height derived using the Best Quality Winds only. Contains fill when no suitable wind available. (feature-referenced). Stereoscopically derived heights only - no inputs	XDim,YDim	INT16	m	None	No data=-9999

from RCCM or AGP.					
PrelimERStereoHeight_BestWinds Preliminary stereoscopic height derived using the Best Quality Winds only. Contains fill when no suitable wind available. (ellipsoid-referenced). Stereoscopically derived heights only - no inputs from RCCM or AGP.	XDim,YDim	INT16	m	None	No data=-9999
PrelimSDCM_BestWinds Preliminary Stereoscopically-Derived Cloud Mask derived using the BestWinds heights. Contains fill when no suitable wind available. (stereoscopically derived inputs only - no inputs used from Radiometric Camera-by-camera Cloud Mask or AGP). feature-referenced.	XDim,YDim	UINT8	None	None	No Retrieval=0; CloudHC=1; CloudLC=2; NearSurfaceLC=3; NearSurfaceHC=4
PrelimFRStereoHeight_WithoutWinds Preliminary stereoscopic height derived without correcting for the cloud motion. (feature-referenced). Stereoscopically derived heights only - no inputs from RCCM or AGP.	XDim,YDim	INT16	m	None	No data=-9999
PrelimERStereoHeight_WithoutWinds Preliminary stereoscopic height derived without correcting for the cloud motion. (ellipsoid-referenced). Stereoscopically derived heights only - no inputs from RCCM or AGP.	XDim,YDim	INT16	m	None	No data=-9999
PrelimSDCM_WithoutWinds Preliminary Stereoscopically-Derived Cloud Mask derived using the WithoutWinds heights. (stereo-scopically derived inputs only - no inputs used from Radiometric Camera-by-camera Cloud Mask or AGP). feature-referenced.	XDim,YDim	UINT8	None	None	No Retrieval=0; CloudHC=1; CloudLC=2; NearSurfaceLC=3; NearSurfaceHC=4
PrelimERStereoHeight_RawWinds Preliminary stereoscopic height calculated using all available wind vectors (regardless of their quality) and defaulting back to a zero-wind vector otherwise. (ellipsoid referenced). Stereoscopically derived heights only - no inputs from RCCM or AGP.	XDim,YDim	INT16	m	None	No data=-9999
CloudMotionBin_RawWinds Wind bin chosen (high, low, overlap) in the calculation of the RawWinds height field. (ellipsoid-referenced).	XDim,YDim	UINT8	None	None	No Retrieval=0; Low cloud bin=1; High cloud bin=2; Overlap=3
MetricValue_RawWinds M2 or M3 metric value corresponding to the PrelimERStereoHeight_RawWinds retrieval (ellipsoidreferenced)..	XDim,YDim	FLOAT 32	None	None	No data=-9999.0
XDisparity_RawWinds Retrieved Along-track Disparity from Height Comparison Camera used in deriving the PrelimERStereoHeight_RawWinds. May jump between forward and aft comparison cameras within the same block (appearing discontinuous). (ellipsoid-referenced).	XDim,YDim	INT16	Pixels	None	No data=-9999

YDisparity_RawWinds Retrieved Cross-track Disparity from Height Comparison Camera used in deriving the PrelimERStereoHeight_RawWinds. May jump between forward and aft comparison cameras within the same block (appearing discontinuous). (ellipsoid-referenced)	XDim,YDim	INT16	Pixels	None	No data=-9999
MatcherMethod_RawWinds Stereoscopic matcher used in deriving the PrelimERStereoHeight_RawWinds. (ellipsoid-referenced).	XDim,YDim	UINT8	None	None	No Retrieval=0; M2=1; M3=2; RS=3; M2 & M3=4
MatchSubtype_RawWinds Stereoscopic match subtype used in deriving the PrelimERStereoHeight_RawWinds. (ellipsoid-referenced)	XDim,YDim	UINT8	None	None	No Retrieval=0; Previous Match Method=1; Pyramid Method=2
FRSnowIceMask_BestWinds Feature-referenced snow/ice mask that used the BestWinds heights for projection. Contains no_snow_ice when no suitable wind available. (feature-referenced).	XDim,YDim	UINT8	None	None	0=not snow/ice covered 1=snow/ice covered
FRSnowIceSource_BestWinds The data source for the FRSnowIceMask_BestWinds.	XDim,YDim	UINT8	None	None	No Retrieval=0; TASC: other not available=1; TASC: other out-ofbounds=2, DAO:other not available=3; DAO:other out-of-bounds=4; NSIDC:other not available=5; NSIDC:other out-of-bounds=6; MODIS=7
FRSnowIceMask_WithoutWinds Feature-referenced snow/ice mask that used the WithoutWinds heights for projection. (feature-referenced).	XDim,YDim	UINT8	None	None	0=not snow/ice covered 1=snow/ice covered
FRSnowIceSource_WithoutWinds The data source for the FRSnowIceMask_WithoutWinds.	XDim,YDim	UINT8	None	None	No Retrieval=0; TASC: other not available=1; TASC: other out-ofbounds=2, DAO:other not available=3; DAO:other out-of-bounds=4; NSIDC:other not available=5; NSIDC:other out-of-bounds=6; MODIS=7

TRSnowIceMask Terrain-referenced snow/ice mask	XDim,YDim	UINT8	None	None	0=not snow/ice covered 1=snow/ice covered
TRSnowIceSource Terrain-referenced snow/ice mask and external data source	XDim,YDim	UINT8	None	None	No Retrieval=0; TASC:other not available=1; TASC:other out-ofbounds=2, DAO:other not available=3; DAO:other out-of-bounds=4; NSIDC:other not available=5; NSIDC:other out-of-bounds=6; MODIS=7;
RLRAregParams (Spatial Resolution: 2.2 km x 2.2 km, XDim = 64, YDim = 256)					
RLRA_WithoutWinds Reflecting Level Reference Altitude derived from the StereoHeight_WithoutWinds data.	XDim,YDim	INT16	m	None	No data=-9999
MinStereoHt_WithoutWinds Minimum value of the WithoutWinds stereoscopically retrieved heights that contributed to this particular RLRA.	XDim,YDim	INT16	m	None	No data = -9999
MaxStereoHt_WithoutWinds Maximum value of the WithoutWinds stereoscopically retrieved heights that contributed to this particular RLRA.	XDim,YDim	INT16	m	None	No data = -9999
RLRAStDev_WithoutWinds RLRA standard deviation calculated from stereoscopically derived heights and surface over-rides.	XDim,YDim	INT16	m	None	No data=-9999
DomainParams (Spatial Resolution: 70.4 km x 70.4 km, XDim = 2, YDim = 8)					
CloudMotionSource Motion vector source flag	XDim,YDim	UINT8	None	None	Default motion vector used (stereo matching not attempted)=0; Wind Retrieval failed due to poor registration = 1; Default motion vector used (stereo matching failed)=2; LowCloud Wind Retrieval (stereo matching successful)=3; HighCloudWind Retrieval (stereo matching

					successful) = 4; LowCloudWind and HighCloudWind retrievals (stereo matching successful) = 5; No data = 253
NSCloudMotionSpeedLowCloudBin North-South motion vector speed from low-cloud bin	XDim,YDim	FLOAT32	m/s	None	No data=-9999.0
EWCloudMotionSpeedLowCloudBin East-West motion vector speed from low-cloud bin	XDim,YDim	FLOAT32	m/s	None	No data=-9999.0
NSCloudMotionSpeedHighCloudBin North-South motion vector speed from high-cloud bin	XDim,YDim	FLOAT32	m/s	None	No data=-9999.0
EWCloudMotionSpeedHighCloudBin East-West motion vector speed from high-cloud bin	XDim,YDim	FLOAT32	m/s	None	No data=-9999.0
MedianHeightLowCloudBin Median height of all those triplets contributing to the low-cloud motion vector.	XDim,YDim	FLOAT32	m	None	No data = -9999.0
MedianHeightHighCloudBin Median height of all those triplets contributing to the high-cloud motion vector.	XDim,YDim	FLOAT32	m	None	No data = -9999.0
LoHiCloudBinHeightSeparator Height separating High Cloud and Low Cloud motion vector bins	XDim,YDim	FLOAT32	m	None	No data=-9999.0
LowCloudBinIdentifier Identifier stating whether the LowCloud wind was the Most-Populated or Next-Most-Populated bin. Useful for looking at the FwdAft Wind Differences and correlating them to the Low/High wind vectors.	XDim,YDim	UINT8	None	None	0 = No Retrieval, 1 = MostPopulated Bin 2 = NextMostPopulated Bin
HighCloudBinIdentifier Same as above, except for the HighCloud wind.	XDim,YDim	UINT8	None	None	0 = No Retrieval, 1 = MostPopulated Bin 2 = NextMostPopulated Bin
WindQualityFlagLowCloudBin The overall quality of the LowCloud Wind.	XDim,YDim	UINT8	None	None	0 = No Retrieval, 1 = Poor, 2= Unknown, 3= Good, 4 = VeryGood.
WindQualityFlagHighCloudBin The overall quality of the HighCloud Wind.	XDim,YDim	UINT8	None	None	0 = No Retrieval, 1 = Poor, 2= Unknown, 3= Good, 4 = VeryGood.
WindFwdAftDiffsSummaryFlagLowCloudBin	XDim,YDim	UINT8	None	None	0 = No Retrieval,

The quality of the LowCloud wind based on the difference between the fwd-triplet and aft-triplet wind retrievals.					1 = Poor, 2= Unknown, 3= Good, 4 = VeryGood.
WindFwdAftDiffSummaryFlagHighCloudBin The quality of the HighCloud wind based on the difference between the fwd-triplet and aft-triplet wind retrievals.	XDim,YDim	UINT8	None	None	0 = No Retrieval, 1 = Poor, 2= Unknown, 3= Good, 4 = VeryGood.
WindDisparitySummaryFlagLowCloudBin The quality of the LowCloud wind based on the disparities retrieved from the stereo-matcher.	XDim,YDim	UINT8	None	None	0 = No Retrieval, 1 = Poor, 2= Unknown, 3= Good, 4 = VeryGood.
WindDisparitySummaryFlagHighCloudBin The quality of the HighCloud wind based on the disparities retrieved from the stereo-matcher.	XDim,YDim	UINT8	None	None	0 = No Retrieval, 1 = Poor, 2= Unknown, 3= Good, 4 = VeryGood.
AlongMisregistrationErrorDf Misregistration error of the Df camera in the along-track direction. -N indicates camera is shifted N pixels in the upward direction, +N indicates camera shifted N pixels downward.	XDim,YDim	INT32	275-m pixels	None	No data = -9999
CrossMisregistrationErrorDf Misregistration error of the Df camera in the cross-track direction. -N indicates camera is shifted N pixels to the left, +N indicates camera shifted N pixels to the right.	XDim,YDim	INT32	275-m pixels	None	No data = -9999
AlongMisregistrationErrorDa Misregistration error of the Da camera in the cross-track direction.	XDim,YDim	INT32	275-m pixels	None	No data = -9999
CrossMisregistrationErrorDa Misregistration error of the Da camera in the cross-track direction.	XDim,YDim	INT32	275-m pixels	None	No data = -9999
FwdAft_NSWind_Differences_MostPopBin The difference between the North-South wind components of the fwdcamera retrievals and the aft-camera ones. Pertains to the MostPopulated wind vector. Used in determining the wind quality (a large difference indicates a poor quality wind).	XDim,YDim	FLOAT32	m/s	None	No data = -9999
FwdAft_EWWind_Differences_MostPopBin Same as above, except for the East-West wind components.	XDim,YDim	FLOAT32	m/s	None	No data = -9999
FwdAft_WHeight_Differences_MostPopBin Same as above, except for the height associated with the wind vector..	XDim,YDim	FLOAT32	m	None	No data = -9999
FwdAft_NSWind_Differences_NextMostPopBin Difference in the North-South wind components for the next-mostpopulated wind bin.	XDim,YDim	FLOAT32	m/s	None	No data = -9999
FwdAft_EWWind_Differences_NextMostPopBi	XDim,YDim	FLOAT32	m/s	None	No data = -9999

n Difference in the East-West wind components for the next-mostpopulated wind bin.					
FwdAft_WHeight_Differences_NextMostPopBin Difference in the wind heights for the next-most-populated wind bin.	XDim,YDim	FLOAT32	m	None	No data = -9999
HeightRefCam Height retrieval reference camera	XDim,YDim	UINT8	None	None	No Retrieval=0; Df=1; Cf=2; Bf=3; Af=4; An=5; Aa=6; Ba=7; Ca=8; Da=9
HeightCompCamMostFwdScatt Height retrieval comparison camera that is the most-forward scattering of the two Height Retrieval Comparison Cameras.	XDim,YDim	UINT8	None	None	No Retrieval=0; Df=1; Cf=2; Bf=3; Af=4; An=5; Aa=6; Ba=7; Ca=8; Da=9
HeightCompCamLeastFwdScatt Height retrieval comparison camera that is the least-forward scattering.	XDim,YDim	UINT8	None	None	No Retrieval=0; Df=1; Cf=2; Bf=3; Af=4; An=5; Aa=6; Ba=7; Ca=8; Da=9
AvgScatAngMostFwd Average scattering angle for the most forward-scattering comparison camera	XDim,YDim	FLOAT32	deg	None	No data=-9999.0 or -8888 (block not processed)
AvgScatAngLeastFwd Average scattering angle for the least forward-scattering comparison camera	XDim,YDim	FLOAT32	deg	None	No data=-9999.0 or -8888 (block not processed)
CloudMotionRefCam Wind retrieval reference camera	XDim,YDim	UINT8	None	None	No Retrieval=0; Df=1; Cf=2; Bf=3; Af=4; An=5; Aa=6; Ba=7; Ca=8; Da=9
CloudMotionInterCamFwd Forward wind retrieval intermediate camera	XDim,YDim	UINT8	None	None	No Retrieval=0; Df=1; Cf=2; Bf=3; Af=4; An=5; Aa=6; Ba=7; Ca=8; Da=9
CloudMotionCompCamFwd Forward wind retrieval comparison camera	XDim,YDim	UINT8	None	None	No Retrieval=0; Df=1; Cf=2; Bf=3; Af=4; An=5; Aa=6; Ba=7; Ca=8; Da=9
CloudMotionInterCamAft Aftward wind retrieval intermediate camera	XDim,YDim	UINT8	None	None	No Retrieval=0; Df=1; Cf=2; Bf=3; Af=4; An=5; Aa=6; Ba=7; Ca=8; Da=9
CloudMotionCompCamAft Aftward wind retrieval comparison camera	XDim,YDim	UINT8	None	None	No Retrieval=0; Df=1; Cf=2; Bf=3; Af=4; An=5;

					Aa=6; Ba=7; Ca=8; Da=9
PeakWidthBfAnCrossDisparity Width of the two largest peaks in the Bf-An cross-track disparity distribution (in 275m pixels) that correspond to the low and high cloud winds. Used in the wind-retrieval qa.	XDim,YDim, WindDim	INT32	None	None	No data = -9999
PeakWidthBfAnAlongDisparity Width of the two largest peaks in the Bf-An along-track disparity distribution (in 275m pixels) that correspond to the low and high cloud winds. Used in the wind-retrieval qa.	XDim,YDim, WindDim	INT32	None	None	No data = -9999
PeakWidthBfDfCrossDisparity Width of the two largest peaks in the Bf-Df cross-track disparity distribution (in 275m pixels) that correspond to the low and high cloud winds. Used in the wind-retrieval qa.	XDim,YDim, WindDim	INT32	None	None	No data = -9999
PeakWidthBfDfAlongDisparity Width of the two largest peaks in the Bf-Df along-track disparity distribution (in 275m pixels) that correspond to the low and high cloud winds. Used in the wind-retrieval qa.	XDim,YDim, WindDim	INT32	None	None	No data = -9999
PeakWidthBaAnCrossDisparity Width of the two largest peaks in the Ba-An cross-track disparity distribution (in 275m pixels) that correspond to the low and high cloud winds. Used in the wind-retrieval qa.	XDim,YDim, WindDim	INT32	None	None	No data = -9999
PeakWidthBaAnAlongDisparity Width of the two largest peaks in the Ba-An along-track disparity distribution (in 275m pixels) that correspond to the low and high cloud winds. Used in the wind-retrieval qa.	XDim,YDim, WindDim	INT32	None	None	No data = -9999
PeakWidthBaDaCrossDisparity Width of the two largest peaks in the Ba-Da cross-track disparity distribution (in 275m pixels) that correspond to the low and high cloud winds. Used in the wind-retrieval qa.	XDim,YDim, WindDim	INT32	None	None	No data = -9999
PeakWidthBaDaAlongDisparity Width of the two largest peaks in the Ba-Da along-track disparity distribution (in 275m pixels) that correspond to the low and high cloud winds. Used in the wind-retrieval qa.	XDim,YDim, WindDim	INT32	None	None	No data = -9999
PeakCountsBfAnCrossDisparity Number of counts in the two largest peaks in the Bf-An cross-track disparity distribution that correspond to the low and high cloud winds. Used in the wind-retrieval qa.	XDim,YDim, WindDim	INT32	None	None	No data = -9999
PeakCountsBfAnAlongDisparity Number of counts in the two largest peaks in the Bf-An along-track disparity distribution that correspond to the low and high cloud winds. Used in the wind-retrieval qa.	XDim,YDim, WindDim	INT32	None	None	No data = -9999

PeakCountsBfDfCrossDisparity Number of counts in the two largest peaks in the Bf-Df cross-track disparity distribution that correspond to the low and high cloud winds. Used in the wind-retrieval qa.	XDim,YDim, WindDim	INT32	None	None	No data = -9999
PeakCountsBfDfAlongDisparity Number of counts in the two largest peaks in the Bf-Df along-track disparity distribution that correspond to the low and high cloud winds. Used in the wind-retrieval qa.	XDim,YDim, WindDim	INT32	None	None	No data = -9999
PeakCountsBaAnCrossDisparity Number of counts in the two largest peaks in the Ba-An cross-track disparity distribution that correspond to the low and high cloud winds. Used in the wind-retrieval qa.	XDim,YDim, WindDim	INT32	None	None	No data = -9999
PeakCountsBaAnAlongDisparity Number of counts in the two largest peaks in the Ba-An along-track disparity distribution that correspond to the low and high cloud winds. Used in the wind-retrieval qa.	XDim,YDim, WindDim	INT32	None	None	No data = -9999
PeakCountsBaDaCrossDisparity Number of counts in the two largest peaks in the Ba-Da cross-track disparity distribution that correspond to the low and high cloud winds. Used in the wind-retrieval qa.	XDim,YDim, WindDim	INT32	None	None	No data = -9999
PeakCountsBaDaAlongDisparity Number of counts in the two largest peaks in the Ba-Da along-track disparity distribution that correspond to the low and high cloud winds. Used in the wind-retrieval qa.	XDim,YDim, WindDim	INT32	None	None	No data = -9999
NumSimilarPeaksBfAnCrossDisparity Number of peaks present in the Bf-An cross-track wind-disparity histogram that have a similar number of counts to the most and next-most populated peaks. Used in the wind-retrieval qa. A large number of similar peaks indicates a poor quality stereo retrieval that did not produce a clear signal.	XDim,YDim, WindDim	INT32	None	None	No data = -9999
NumSimilarPeaksBfAnAlongDisparity Number of peaks present in the Bf-An along-track wind-disparity histogram that have a similar number of counts to the most and next-most populated peaks. Used in the wind-retrieval qa.	XDim,YDim, WindDim	INT32	None	None	No data = -9999
NumSimilarPeaksBfDfCrossDisparity Number of peaks present in the Bf-Df cross-track wind-disparity histogram that have a similar number of counts to the most and next-most populated peaks. Used in the wind-retrieval qa.	XDim,YDim, WindDim	INT32	None	None	No data = -9999
NumSimilarPeaksBfDfAlongDisparity Number of peaks present in the Bf-Df along-track wind-disparity histogram that have a similar number of counts to the most and next-most	XDim,YDim, WindDim	INT32	None	None	No data = -9999

populated peaks. Used in the wind-retrieval qa.					
NumSimilarPeaksBaAnCrossDisparity Number of peaks present in the Ba-An cross-track wind-disparity histogram that have a similar number of counts to the most and next-most populated peaks. Used in the windretrieval qa.	XDim,YDim, WindDim	INT32	None	None	No data = -9999
NumSimilarPeaksBaAnAlongDisparity Number of peaks present in the Bf-An along-track wind-disparity histogram that have a similar number of counts to the most and next-most populated peaks. Used in the wind-retrieval qa.	XDim,YDim, WindDim	INT32	None	None	No data = -9999
NumSimilarPeaksBaDaCrossDisparity Number of peaks present in the Ba-Da cross-track wind-disparity histogram that have a similar number of counts to the most and next-most populated peaks. Used in the windretrieval qa.	XDim,YDim, WindDim	INT32	None	None	No data = -9999
NumSimilarPeaksBaDaAlongDisparity Number of peaks present in the Ba-Da along-track wind-disparity histogram that have a similar number of counts to the most and next-most populated peaks. Used in the windretrieval qa.	XDim,YDim, WindDim	INT32	None	None	No data = -9999
PeakLocationBfAnCrossDisparity Location of the two largest peaks in the Bf-An cross-track disparity distribution that correspond to the low and high cloud winds. Used in the wind-retrieval qa.	XDim,YDim, WindDim	INT32	None	None	No data = -9999
PeakLocationBfAnAlongDisparity Location of the two largest peaks in the Bf-An along-track disparity distribution that correspond to the low and high cloud winds. Used in the wind-retrieval qa.	XDim,YDim, WindDim	INT32	None	None	No data = -9999
PeakLocationBfDfCrossDisparity Location of the two largest peaks in the Bf-Df cross-track disparity distribution that correspond to the low and high cloud winds. Used in the wind-retrieval qa.	XDim,YDim, WindDim	INT32	None	None	No data = -9999
PeakLocationBfDfAlongDisparity Location of the two largest peaks in the Bf-Df along-track disparity distribution that correspond to the low and high cloud winds. Used in the wind-retrieval qa.	XDim,YDim, WindDim	INT32	None	None	No data = -9999
PeakLocationBaAnCrossDisparity Location of the two largest peaks in the Ba-An cross-track disparity distribution that correspond to the low and high cloud winds. Used in the wind-retrieval qa.	XDim,YDim, WindDim	INT32	None	None	No data = -9999
PeakLocationBaAnAlongDisparity Location of the two largest peaks in the Ba-An along-track disparity distribution that correspond to the low and high cloud winds. Used in the wind-retrieval qa.	XDim,YDim, WindDim	INT32	None	None	No data = -9999

PeakLocationBaDaCrossDisparity Location of the two largest peaks in the Ba-Da cross-track disparity distribution that correspond to the low and high cloud winds. Used in the wind-retrieval qa.	XDim,YDim, WindDim	INT32	None	None	No data = -9999
PeakLocationBaDaAlongDisparity Location of the two largest peaks in the Ba-Da along-track disparity distribution that correspond to the low and high cloud winds. Used in the wind-retrieval qa.	XDim,YDim, WindDim	INT32	None	None	No data = -9999
HistogramBfAnCrossDisparity Histogram distribution of the Bf-An cross-track disparities. Used in the wind-retrieval qa.	XDim,YDim, WindYDisparityDim	INT16	None	None	No data = 0
HistogramBfAnAlongDisparity Histogram distribution of the Bf-An along-track disparities. Used in the wind-retrieval qa.	XDim,YDim, WindXDisparityDim	INT16	None	None	No data = 0
HistogramBfDfCrossDisparity Histogram distribution of the Bf-Df cross-track disparities. Used in the wind-retrieval qa.	XDim,YDim, WindYDisparityDim	INT16	None	None	No data = 0
HistogramBfDfAlongDisparity Histogram distribution of the Bf-Df along-track disparities. Used in the wind-retrieval qa.	XDim,YDim, WindXDisparityDim	INT16	None	None	No data = 0
HistogramBaAnCrossDisparity Histogram distribution of the Ba-An cross-track disparities. Used in the wind-retrieval qa.	XDim,YDim, WindYDisparityDim	INT16	None	None	No data = 0
HistogramBaAnAlongDisparity Histogram distribution of the Ba-An along-track disparities. Used in the wind-retrieval qa.	XDim,YDim, WindXDisparityDim	INT16	None	None	No data = 0
HistogramBaDaCrossDisparity Histogram distribution of the Ba-Da cross-track disparities. Used in the wind-retrieval qa.	XDim,YDim, WindYDisparityDim	INT16	None	None	No data = 0
HistogramBaDaAlongDisparity Histogram distribution of the Ba-Da along-track disparities. Used in the wind-retrieval qa.	XDim,YDim, WindXDisparityDim	INT16	None	None	No data = 0
WindDisparityHistogramCrossLowerBounds Lower bound (in 275m pixels) of the cross-track disparity distributions.	XDim,YDim	INT16	None	None	No data = -9999
WindDisparityHistogramCrossUpperBounds Upper bound (in 275m pixels) of the cross-track disparity distributions.	XDim,YDim	INT16	None	None	No data = -9999
WindDisparityHistogramAlongLowerBounds Lower bound (in 275m pixels) of the along-track disparity distributions.	XDim,YDim	INT16	None	None	No data = -9999

WindDisparityHistogramAlongUpperBounds Upper bound (in 275m pixels) of the along-track disparity distributions.	XDim,YDim	INT16	None	None	No data = -9999
NumCloudMotionTripletsMatcher Total number of matches found by NM/M2 in the wind-retrieval process.	XDim,YDim	INT32	None	None	No data=-9999
NumCloudMotionTripletsMatcherFwd Total number of matches found by NM/M2 for the forward triplets of cameras in the wind-retrieval process	XDim,YDim	INT32	None	None	No data = -9999
NumCloudMotionTripletsMatcherAft Total number of matches found by NM/M2 for the Aft triplets of cameras in the wind-retrieval process	XDim,YDim	INT32	None	None	No data = -9999
NumM23Prev Number of disparities assigned using M2 and verified by M3 using previous match method	XDim,YDim	INT32	None	None	No data=-9999 or -8888 (block not processed)
NumM2Prev Number of disparities assigned using M2 and not verified by M3 using previous match method	XDim,YDim	INT32	None	None	No data=-9999 or -8888 (block not processed)
NumM3Prev Number of disparities assigned using M3 using previous match method	XDim,YDim	INT32	None	None	No data=-9999 or -8888 (block not processed)
NumM23Pyr Number of disparities assigned using M2 and verified by M3 using pyramid method	XDim,YDim	INT32	None	None	No data=-9999 or -8888 (block not processed)
NumM2Pyr Number of disparities assigned using M2 and not verified by M3 using pyramid method	XDim,YDim	INT32	None	None	No data=-9999 or -8888 (block not processed)
NumM3Pyr Number of disparities assigned using M3 using pyramid method	XDim,YDim	INT32	None	None	No data=-9999 or -8888 (block not processed)
NumRS Number of disparities assigned using RS	XDim,YDim	INT32	None	None	No data=-9999 or -8888 (block not processed)
NumDisparitiesPrevMostFwd Number of disparities assigned using previous match method and choosing most fwd-scattering camera pair	XDim,YDim	INT32	None	None	No data=-9999 or -8888 (block not processed)
NumDisparitiesPrevLeastFwd Number of disparities assigned using previous match method and choosing least fwd-scattering camera pair	XDim,YDim	INT32	None	None	No data=-9999 or -8888 (block not processed)
NumDisparitiesPyrMostFwd Number of disparities assigned using pyramid method and choosing most fwd-scattering camera pair	XDim,YDim	INT32	None	None	No data=-9999 or -8888 (block not processed)
NumDisparitiesPyrLeastFwd Number of disparities assigned using pyramid method and choosing least fwd-scattering camera pair	XDim,YDim	INT32	None	None	No data=-9999 or -8888 (block not processed)

NumDisparitiesPrev Number of disparities assigned using previous match method	XDim,YDim	INT32	None	None	No data=-9999 or -8888 (block not processed)
NumDisparitiesPyr Number of disparities assigned using pyramid method	XDim,YDim	INT32	None	None	No data=-9999 or -8888 (block not processed)
NumM23SkewHCPrevMostFwd Number of disparities determined using M2 confirmed by M3, and having HC ray skewness (previous match method, most fwd-scattering camera pair)	XDim,YDim	INT32	None	None	No data=-9999 or -8888 (block not processed)
NumM23SkewLCPrevMostFwd Number of disparities determined using M2 confirmed by M3, and having LC ray skewness (previous match method, most fwd-scattering camera pair)	XDim,YDim	INT32	None	None	No data=-9999 or -8888 (block not processed)
NumM23SkewBlunderPrevMostFwd Number of disparities determined using M2 confirmed by M3, and having ray skewness blunder (previous match method, most fwd-scattering camera pair)	XDim,YDim	INT32	None	None	No data=-9999 or -8888 (block not processed)
NumM23SkewHCPrevLeastFwd Number of disparities determined using M2 confirmed by M3, and having HC ray skewness (previous match method, least fwd-scattering camera pair)	XDim,YDim	INT32	None	None	No data=-9999 or -8888 (block not processed)
NumM23SkewLCPrevLeastFwd Number of disparities determined using M2 confirmed by M3, and having LC ray skewness (previous match method, least fwd-scattering camera pair)	XDim,YDim	INT32	None	None	No data=-9999 or -8888 (block not processed)
NumM23SkewBlunderPrevLeastFwd Number of disparities determined using M2 confirmed by M3, and having ray skewness blunder (previous match method, least fwd-scattering camera pair)	XDim,YDim	INT32	None	None	No data=-9999 or -8888 (block not processed)
NumM23SkewHCPyrMostFwd Number of disparities determined using M2 confirmed by M3, and having HC ray skewness (pyramid method, most fwd-scattering camera pair)	XDim,YDim	INT32	None	None	No data=-9999 or -8888 (block not processed)
NumM23SkewLCPyrMostFwd Number of disparities determined using M2 confirmed by M3, and having LC ray skewness (pyramid method, most fwd-scattering camera pair)	XDim,YDim	INT32	None	None	No data=-9999 or -8888 (block not processed)
NumM23SkewBlunderPyrMostFwd Number of disparities determined using M2 confirmed by M3, and having ray skewness blunder (pyramid method, most fwd-scattering camera pair)	XDim,YDim	INT32	None	None	No data=-9999 or -8888 (block not processed)
NumM23SkewHCPyrLeastFwd Number of disparities determined using M2	XDim,YDim	INT32	None	None	No data=-9999 or -8888 (block not

confirmed by M3, and having HC ray skewness (pyramid method, least fwd-scattering camera pair)					processed)
NumM23SkewLCPyrLeastFwd Number of disparities determined using M2 confirmed by M3, and having LC ray skewness (pyramid method, least fwd-scattering camera pair)	XDim,YDim	INT32	None	None	No data=-9999 or -8888 (block not processed)
NumM23SkewBlunderPyrLeastFwd Number of disparities determined using M2 confirmed by M3, and having ray skewness blunder (pyramid method, least fwd-scattering camera pair)	XDim,YDim	INT32	None	None	No data=-9999 or -8888 (block not processed)
NumM2SkewHCPrevMostFwd Number of disparities determined using M2 not confirmed by M3, and having HC ray skewness (previous match method, most fwd-scattering camera pair)	XDim,YDim	INT32	None	None	No data=-9999 or -8888 (block not processed)
NumM2SkewLCPrevMostFwd Number of disparities determined using M2 not confirmed by M3, and having LC ray skewness (previous match method, most fwd-scattering camera pair)	XDim,YDim	INT32	None	None	No data=-9999 or -8888 (block not processed)
NumM2SkewBlunderPrevMostFwd Number of disparities determined using M2 not confirmed by M3, and having ray skewness blunder (previous match method, most fwd-scattering camera pair)	XDim,YDim	INT32	None	None	No data=-9999 or -8888 (block not processed)
NumM2SkewHCPrevLeastFwd Number of disparities determined using M2 and having HC ray skewness (previous match method, least fwd-scattering camera pair)	XDim,YDim	INT32	None	None	No data=-9999 or -8888 (block not processed)
NumM2SkewLCPrevLeastFwd Number of disparities determined using M2 and having LC ray skewness (previous match method, least fwd-scattering camera pair)	XDim,YDim	INT32	None	None	No data=-9999 or -8888 (block not processed)
NumM2SkewBlunderPrevLeastFwd Number of disparities determined using M2 and having ray skewness blunder (previous match method, least fwd-scattering camera pair)	XDim,YDim	INT32	None	None	No data=-9999 or -8888 (block not processed)
NumM2SkewHCPyrMostFwd Number of disparities determined using M2 not confirmed by M3, and having HC ray skewness (pyramid method, most fwd-scattering camera pair)	XDim,YDim	INT32	None	None	No data=-9999 or -8888 (block not processed)
NumM2SkewLCPyrMostFwd Number of disparities determined using M2 not confirmed by M3, and having LC ray skewness (pyramid method, most fwd-scattering camera pair)	XDim,YDim	INT32	None	None	No data=-9999 or -8888 (block not processed)
NumM2SkewBlunderPyrMostFwd Number of disparities determined using M2 not confirmed by M3, and having ray skewness blunder (pyramid method, most fwd-scattering camera pair)	XDim,YDim	INT32	None	None	No data=-9999 or -8888 (block not processed)

NumM2SkewHCPyrLeastFwd Number of disparities determined using M2 and having HC ray skewness (pyramid method, least fwd-scattering camera pair)	XDim,YDim	INT32	None	None	No data=-9999 or -8888 (block not processed)
NumM2SkewLCPyrLeastFwd Number of disparities determined using M2 and having LC ray skewness (pyramid method, east fwdscattering camera pair)	XDim,YDim	INT32	None	None	No data=-9999 or -8888 (block not processed)
NumM2SkewBlunderPyrLeastFwd Number of disparities determined using M2 and having ray skewness blunder pyramid method, (least fwdscattering camera pair)	XDim,YDim	INT32	None	None	No data=-9999 or -8888 (block not processed)
NumM3SkewHCPrevMostFwd Number of disparities determined using M3 and having HC ray skewness (previous match method, most fwd-scattering camera pair)	XDim,YDim	INT32	None	None	No data=-9999 or -8888 (block not processed)
NumM3SkewLCPrevMostFwd Number of disparities determined using M3 and having LC ray skewness (previous match method, most fwd-scattering camera pair)	XDim,YDim	INT32	None	None	No data=-9999 or -8888 (block not processed)
NumM3SkewBlunderPrevMostFwd Number of disparities determined using M3 and having ray skewness blunder (previous match method, most fwd-scattering camera pair)	XDim,YDim	INT32	None	None	No data=-9999 or -8888 (block not processed)
NumM3SkewHCPrevLeastFwd Number of disparities determined using M3 and having HC ray skewness (previous match method, least fwd-scattering camera pair)	XDim,YDim	INT32	None	None	No data=-9999 or -8888 (block not processed)
NumM3SkewLCPrevLeastFwd Number of disparities determined using M3 and having LC ray skewness (previous match method, least fwd-scattering camera pair)	XDim,YDim	INT32	None	None	No data=-9999 or -8888 (block not processed)
NumM3SkewBlunderPrevLeastFwd Number of disparities determined using M3 and having ray skewness blunder (previous match method, least fwd-scattering camera pair)	XDim,YDim	INT32	None	None	No data=-9999 or -8888 (block not processed)
NumM3SkewHCPyrMostFwd Number of disparities determined using M3 and having HC ray skewness (pyramid method, most fwd-scattering camera pair)	XDim,YDim	INT32	None	None	No data=-9999 or -8888 (block not processed)
NumM3SkewLCPyrMostFwd Number of disparities determined using M3 and having LC ray skewness (pyramid method, most fwd-scattering camera pair)	XDim,YDim	INT32	None	None	No data=-9999 or -8888 (block not processed)
NumM3SkewBlunderPyrMostFwd Number of disparities determined using M3 and having ray skewness blunder (pyramid method, most fwdscattering camera pair)	XDim,YDim	INT32	None	None	No data=-9999 or -8888 (block not processed)
NumM3SkewHCPyrLeastFwd Number of disparities determined using M3 and having HC ray skewness (pyramid method, least	XDim,YDim	INT32	None	None	No data=-9999 or -8888 (block not processed)

fwd-scattering camera pair)					
NumM3SkewLCPyrLeastFwd Number of disparities determined using M3 and having LC ray skewness (pyramid method, least fwd-scattering camera pair)	XDim,YDim	INT32	None	None	No data=-9999 or -8888 (block not processed)
NumM3SkewBlunderPyrLeastFwd Number of disparities determined using M3 and having ray skewness blunder (pyramid method, least fwdscattering camera pair)	XDim,YDim	INT32	None	None	No data=-9999 or -8888 (block not processed)
NumRSSkewHCMostFwd Number of disparities determined using RS and having HC ray skewness (most fwd-scattering camera pair)	XDim,YDim	INT32	None	None	No data=-9999 or -8888 (block not processed)
NumRSSkewLCMostFwd Number of disparities determined using RS and having LC ray skewness (most fwd-scattering camera pair)	XDim,YDim	INT32	None	None	No data=-9999 or -8888 (block not processed)
NumRSSkewBlunderMostFwd Number of disparities determined using RS and having ray skewness blunder (most fwd-scattering camera pair)	XDim,YDim	INT32	None	None	No data=-9999 or -8888 (block not processed)
NumRSSkewHCLeastFwd Number of disparities determined using RS and having HC ray skewness (least fwd-scattering camera pair)	XDim,YDim	INT32	None	None	No data=-9999 or -8888 (block not processed)
NumRSSkewLCLeastFwd Number of disparities determined using RS and having LC ray skewness (least fwd-scattering camera pair)	XDim,YDim	INT32	None	None	No data=-9999 or -8888 (block not processed)
NumRSSkewBlunderLeastFwd Number of disparities determined using RS and having ray skewness blunder (least fwd-scattering camera pair)	XDim,YDim	INT32	None	None	No data=-9999 or -8888 (block not processed)

7.5.7 Per-grid QA Metadata

Table 7-8: Per-grid QA Metadata for Cloud Stereo Products

Data Field Name	Data Type	Field Dimensions	Valid Range
SwathQaGlobal: Swath-level Constructs			
NNonFillDomains	INT32	--	0 - 2272
NSuccMotionVectorDomains	INT32	--	0 - 2272
NDisparitiesMostFwdScat	INT32	--	0 - 9,306,112
NDisparitiesLeastFwdScat	INT32	--	0 - 9,306,112
NM23Disparities	INT32	--	0 - 9,306,112
NM2Disparities	INT32	--	0 - 9,306,112
NM3Disparities	INT32	--	0 - 9,306,112

NRSDisparities	INT32	--	0 - 9,306,112
NNoRetrievalDisparities	INT32	--	0 - 9,306,112
NNonFillSubregions	INT32	--	0 - 9,306,112
NMODISFRSnowIce	INT32	--	0 - 9,306,112
NNSIDCFRSnowIceMODISOutOfBds	INT32	--	0 - 9,306,112
NNSIDCFRSnowIceMODISNA	INT32	--	0 - 9,306,112
NDAOFRSnowIceNSIDCOutOfBds	INT32	--	0 - 9,306,112
NDAOFRSnowIceNSIDCNA	INT32	--	0 - 9,306,112
NTASCFRSnowIceDAOOutOfBds	INT32	--	0 - 9,306,112
NTASCFRSnowIceDAONA	INT32	--	0 - 9,306,112
NNonFillSubWGoodMODISCldMask	INT32	--	0 - 9,306,112
NNonFillSubWBadMODISCldMask	INT32	--	0 - 9,306,112
NNonFillSubWNAMODISCldMask	INT32	--	0 - 9,306,112
NNonFillSubWGoodMODISCldHt	INT32	--	0 - 9,306,112
NNonFillSubWBadMODISCldHt	INT32	--	0 - 9,306,112
NNonFillSubWNAMODISCldHt	INT32	--	0 - 9,306,112
NNonFillSubSolarOblique	INT32	--	0 - 9,306,112
BlockQaGlobal: Block-level Constructs			
BlockNumber	INT32	--	1 - 180
ValidRecord	UINT8	--	0, 1
TpGeomDataQualInd	FLOAT64	NCAM	-1 - 1
NSubLowMotionVectorBin	INT32	--	0 - 65,536
NSubHighMotionVectorBin	INT32	--	0 - 65,536
NSubOverlapMotionVectorBin	INT32	--	0 - 65,536
NSubNoRetrMotionVectorBin	INT32	--	0 - 65,536
NTRSubSnowIce	INT32	--	0 - 65,536
NFRSubSnowIce	INT32	--	0 - 65,536
NM23MostFwdScat	INT32	--	0 - 65,536
NM23LeastFwdScat	INT32	--	0 - 65,536
NM2MostFwdScat	INT32	--	0 - 65,536
NM2LeastFwdScat	INT32	--	0 - 65,536
NM3MostFwdScat	INT32	--	0 - 65,536
NM3LeastFwdScat	INT32	--	0 - 65,536
NRSMostFwdScat	INT32	--	0 - 65,536
NRSLeastFwdScat	INT32	--	0 - 65,536
NSubStereoHtOverridWSurf	INT32	--	0 - 65,536
NSubStereoHtOverridWDef	INT32	--	0 - 65,536
NSubStereoHtFromMODIS	INT32	--	0 - 65,536
NSubStereoHtNR	INT32	--	0 - 65,536
NDefaultRLRA	INT32	--	0 - 16,384
NNoRetrievalRLRA	INT32	--	0 - 16,384

MeanRLRA	FLOAT32	--	0.0 - 20,000 m

7.6 MISR LEVEL 2 MIL2TCCL CLOUD CLASSIFIER PRODUCT

7.6.1 File Metadata Description

Table 7-9: File Metadata for Cloud Classifier Product Files

File Metadata Field Name	Definition	Data Type	Units	Valid Range
Path_number	Orbit path number	INT32	N/A	1-233
AGP_version_id	Version identifier for AGP	INT32	N/A	2
DID_version_id	Version Identifier for DID (DTED Digital Terrain Elevation Dataset] Intermediate Dataset)	INT32	N/A	4
Number_blocks	Total number of blocks	INT32	N/A	1-180
Ocean_blocks_size	Ocean_blocks.number dimension	INT32	N/A	1-180
Ocean_blocks.count	Total number of blocks containing entirely ocean radiances	INT32	N/A	1-180
Ocean_blocks.numbers	List of block numbers containing entirely ocean radiances	180 x INT32	N/A	1-180
SOM_parameters.som_ellipsoid.a	Semimajor axis of ellipsoid	FLOAT64	meters	WGS84 ellipsoid (6.3781370E+ 06)
SOM_parameters.som_ellipsoid.e2	Eccentricity of ellipsoid squared	FLOAT64	N/A	WGS84 ellipsoid (6.6943480E-03)
SOM_parameters.som_orbit.aprime	Semimajor axis of orbit	FLOAT64	meters	1.0
SOM_parameters.som_orbit.eprime	Eccentricity of orbit	FLOAT64	N/A	1.0
SOM_parameters.som_orbit.gama	Longitude of perigee	FLOAT64	radians	1.0
SOM_parameters.som_orbit.nrev	Number of revolutions per ground track repeat cycle	INT32	N/A	233
SOM_parameters.som_orbit.ro	Radius of circular orbit	FLOAT64	meters	7.0780408E +06
SOM_parameters.som_orbit.i	Inclination of orbit (degrees)	FLOAT64	radians	1.7157253
SOM_parameters.som_orbit.P2P1	Ratio of time of revolution over length of Earth rotation/orbit	FLOAT64	N/A	6.8666667E -02
SOM_parameters.som_orbit.lambda0	Geodetic longitude of ascending node at time 0 (degrees)	FLOAT64	radians	$-2\pi : 2\pi$
Origin_block.ulc.x	SOM X coordinate (in meters) of the upper left corner of the first block	FLOAT64	meters	

Origin_block.ulc.y	SOM Y coordinate (in meters) of the upper left corner of the first block	FLOAT64	meters	
Origin_block.lrc.x	SOM X coordinate (in meters) of the lower right corner of the first block	FLOAT64	meters	
Origin_block.lrc.y	SOM Y coordinate (in meters) of the lower right corner of the first block	FLOAT64	meters	
Start_block	The block number in the AGP which corresponds to the first block in this file containing data.	INT32	N/A	1 - 180 Start_block < End block
End block	The block number in the AGP which corresponds to the last block in this file containing data.	INT32	N/A	1 - 180 Start_block < End block
Cam_mode	Indicates whether the data in this grid file was obtained in MISR global mode or local mode.	INT32	N/A	0-1 1 = global 0 = local
Num_local_modes	The number of MISR local mode acquisitions contained in this file.	INT32	N/A	0-6 0 if data is global mode
Local_mode_site_name	The geographical name of the first local mode site contained in this file.	CHAR8	N/A	string up to 12 characters in length, including null
Orbit_QA	Indication of the overall quality of the orbit data based on analysis of quality flags in the spacecraft attitude and ephemeris data. Geolocation accuracy may be impaired for orbits with poor quality orbit data.	FLOAT32	N/A	-9999.0 = NoRetrieval, -1.0 = Poor, 0.0 = Nominal

7.6.2 Per-grid Metadata Description

Table 7-10: Per-grid Metadata for Cloud Classifier Product Files

Common Grid Metadata	Definition	Data Type	Valid Values
Block_size.resolution_x	Resolution of block x dimension in meters	INT32	1100, 17600
Block_size.resolution_y	Resolution of block y dimension in meters	INT32	1100, 17600
Block_size.size_x	Block x dimension	INT32	128, 8
Block_size.size_y	Block y dimension	INT32	512, 32

7.6.3 Per-block Metadata Description

Table 7-11: Per-block Metadata for Cloud Classifier Product Files

PerBlockMetadataCommon	Definition	Data Type	Valid Values
Block_number	Current block number	INT32	1-180

Ocean_flag	Flag signalling whether the block contains entirely ocean radiances	INT8	0 = block has no ocean or is a mix of ocean and land 1 = block is entirely ocean
Block_coor_ulc_som_meter.x	Upper left corner SOM block x coordinate in meters	FLOAT64	
Block_coor_ulc_som_meter.y	Upper left corner SOM block y coordinate in meters	FLOAT64	
Block_coor_lrc_som_meter.x	Lower right corner SOM block x coordinate in meters	FLOAT64	
Block_coor_lrc_som_meter.y	Lower right corner SOM block y coordinate in meters	FLOAT64	
Data_flag	Flag signalling whether the block contains entirely fill data	INT8	0 = block contains entirely fill data 1 = block contains valid data

Common Per Block Metadata	Definition	Data Type	Valid Values
Geometric DQI	Geometric Data Quality Indicator copied from the L1B2 Terrainprojected parameter file.	INT32	-1 to 1

PerBlockMetadataTime	Definition	Data Type	Valid Values
BlockCenterTime	Imaging time for the block center (AN Camera) in UTC.	CHAR8	

7.6.4 Per-line Metadata Description

None.

7.6.5 Per-pixel Metadata Description

None.

7.6.6 Grid Data Set Descriptions

In order to minimize storage for the TOA/Cloud Product, many logical parameters will be packed so that each bit represents a logical value, or some number of bits within a byte or word represent a flag value.

To facilitate the interpretation of scientific data, floating point values are not scaled. Floating point values, and some integer values, may take on a flag value indicating invalid data. Currently, there is only a single flag value of -9999.0, representing missing floating point data. Missing integer data may be represented either by a value of 0 (for flag data) or -9999 (for measured data) or -99 (for

measured byte integer data). Note that we may later add more flag values to distinguish the reason that the data are missing (e.g., never computed, arithmetic error, overflow, etc.).

Table 7-12: Cloud Classifier Product Field Dimension Descriptions

Dimension	Description	Valid Values
SOMBlockDim	*SOMBlockDim* is the number of SOM blocks in the file. The slowest-varying dimension is implicitly the SOM block dimension. It is not shown in the tables below.	this can vary, with a typical value being approximately 140
XDim	*XDim* is the number of lines in a block. The x dimension direction is identical to the standard SOM x dimension.	128 for 1.1 km parameters 64 for 2.2 km parameters 8 for 17.6 km parameters 4 for 35.2 km parameters 2 for 70.4 km parameters
YDim	*YDim* is the number of samples in a block. The y dimension direction is identical to the standard SOM y dimension.	512 for 1.1 km parameters 256 for 2.2 km parameters 32 for 17.6 km parameters 16 for 35.2 km parameters 8 for 70.4 km parameters
NCamDim	NCamDim distinguishes the individual nine cameras	1-9. DF=1, CF=2, BF=3, AF=4, AN=5, AA=6, BA=7,CA=8, DA=9
NBandDim	NBandDim distinguishes the individual four camera bands	1-4. Blue=1, Green=2, Red=3, NIR=4.
NAltitudeDim	NAltitudeDim is the number of altitude bins in the Regional Scene Classifiers	0-4. NoRetrieval=0, Surface=1, LowAltitude=2, MIddleAltitude=3, HighAltitude=4.

Table 7-13: Cloud Classifier Product Grid Dataset Description

Field Name Parameter Description	Dimension List	Number Type	Units	Transformation	Flag Values
ASCMParams_1.1_km (Spatial Resolution: 1.1 km x 1.1 km, XDim = 128, YDim = 512)					
AngularSignatureCloudMask Final terrain-referenced Angular Signature Cloud Mask formed from a combination of the Fwd and Aft individual masks.	XDim,YDim	UINT8	None	None	NoRetrieval=0; CloudHC=1; CloudLC=2; ClearLC=3; ClearHC=4
ASCMObservable The observable that is com pared against the threshold to calculate the cloud-mask. (Terrain-referenced).	XDim,YDim	FLOAT32	None	None	No data = -9999.0
ASCMRefCamScatteringAngle The scattering angle (in degrees) of the reference camera. (Feature-referenced).	XDim,YDim	FLOAT32	None	None	No data = -9999.0
ASCMReferenceCamera ASCM Reference Camera (one of Df, Da, Cf or Ca). (Terrain-referenced).	XDim,YDim	UINT8	None	None	NoRetrieval=0; Df=1; Cf=2; Ca=8; Da=9

ASCMComparisonCamera ASCM Comparison Camera (one of Cf, Ca, Bf or Ba). (Terrain-referenced).	XDim,YDim	UINT8	None	None	NoRetrieval=0; Cf=2; Bf=3; Ba=7; Ca=8
FeatureRefASCM Feature-referenced ASCM mask formed from a combination of the individual Fwd and Aft masks and then reprojected. Used in calculation of 17.6km Cloud Fraction.	XDim,YDim	UINT8	None	None	NoRetrieval=0; CloudHC=1; CloudLC=2; ClearLC=3; ClearHC=4
FwdCamTerrainRefASCM "preliminary" terrain-referenced ASCM as calculated using the forward cameras	XDim,YDim	UINT8	None	None	NoRetrieval=0; CloudHC=1; CloudLC=2; ClearLC=3; ClearHC=4
AftCamTerrainRefASCM "preliminary" terrain-referenced ASCM as calculated using the aft cameras	XDim,YDim	UINT8	None	None	NoRetrieval=0; CloudHC=1; CloudLC=2; ClearLC=3; ClearHC=4
NumProjectionsASCM The total number of terrain-refer enced ASCM values projecting to this given feature-referenced pixel.	XDim,YDim	UINT8	None	None	No data=0; Not overridden=0; Overridden= >1
CloudShadowMask Cloud Shadow Mask (not implemented)	XDim,YDim	UINT8	None	None	No data=0; Cloud Shadow HC=1; Cloud Shadow LC=2; Cloud Free=3
TopographicShadowMask Topographic Shadow Mask (not implemented)	XDim,YDim	UINT8	None	None	No data=0 Not topo shadowed=1 Topo shadowed=2
SupportVectorSceneClassifier (Spatial Resolution: 1.1km x 1.1km, XDim=128, YDim=512)					
SVMSceneClassifier Scene classification from Support Vector Machine learning algorithm.	XDim,YDim	UINT8	None	None	0 = NoRetrieval, 1 = Aerosol, 2 = Cloud, 3 = Water, 4 = Land, 5 = Snow_Ice,
SVMAerosolConfidenceLevel Probability that this pixel is really aerosol.	XDim,YDim	UINT8	None	None	0 = NoRetrieval, 1 = Highly Likely, 2 = Likely, 3 = Unlikely, 4 = Highly Unlikely
SVMCloudConfidenceLevel Probability that this pixel is really cloud.	XDim,YDim	UINT8	None	None	0 = NoRetrieval, 1 = Highly Likely, 2 = Likely, 3 = Unlikely, 4 = Highly Unlikely

SVMWaterConfidenceLevel Probability that this pixel is really water.	XDim,YDim	UINT8	None	None	0 = NoRetrieval, 1 = Highly Likely, 2 = Likely, 3 = Unlikely, 4 = Highly Unlikely
SVMLandConfidenceLevel Probability that this pixel is really land.	XDim,YDim	UINT8	None	None	0 = NoRetrieval, 1 = Highly Likely, 2 = Likely, 3 = Unlikely, 4 = Highly Unlikely
SVMIceSnowConfidenceLevel Probability that this pixel is really ice-snow.	XDim,YDim	UINT8	None	None	0 = NoRetrieval, 1 = Highly Likely, 2 = Likely, 3 = Unlikely, 4 = Highly Unlikely
SVMDustConfidenceLevel Probability that the detected aerosol is composed of dust. Disregard if classification is not aerosol.	XDim,YDim	UINT8	None	None	0 = NoRetrieval, 1 = Highly Likely, 2 = Likely, 3 = Unlikely, 4 = Highly Unlikely
SVMSmokeConfidenceLevel Probabiliy that the detected aerosol is composed of smoke. Disregard if classification is not aerosol.	XDim,YDim	UINT8	None	None	0 = NoRetrieval, 1 = Highly Likely, 2 = Likely, 3 = Unlikely, 4 = Highly Unlikely
CloudClassifiers_2.2km *(*Spatial Resolution: 2.2km x 2.2km, XDim=64, YDim=256*)*					
ConsensusCloudMask FineResolution ConsensusCloudClassifier calculated from SDCM,RCCM, ASCM	XDim,YDim	UINT8	None	None	NoRetrieval = 0; Overcast = 1; KnownCloud = 2; KnownClear = 3;
ConsensusOvercastMask FineResolution_BestWind OverCast Mask calculated using BestWinds versions of SDCM and FRRCCM (and ASCM).	XDim,YDim	UINT8	None	None	NotOvercast = 0; Overcast = 1;
ConsensusOvercastMask FineResolution_WithoutWind OverCast Mask calculated using WithoutWinds versions of SDCM and FRRCCM. (and ASCM)	XDim,YDim	UINT8	None	None	NotOvercast = 0; Overcast = 1;
MaxRegionalHeightFine Resolution_BestWind Maximum BestWinds Stereo Height in this 2.2km pixel. Only calculated when corresponding OverCast mask is true.	XDim,YDim	INT16	None	None	No data = -9999
MaxRegionalHeightFine Resolution_BestWind Maximum BestWinds Stereo Height in this 2.2km pixel. Only calculated when corresponding OverCast mask is true.	XDim,YDim	INT16	None	None	No data = -9999

CloudFractions_17.6_km (Spatial Resolution: 17.6 km x 17.6 km, XDim = 8, YDim = 32)					
CombinedFractionCloudBestEstimate Best Estimate of the fractional area classified as containing any type of cloud.	XDim,YDim	FLOAT32	None	None	No data=-9999.0 Valid data = 0.0 - 1.0
CombinedFractionCloudHC Fractional area classified as containing any type of cloud with high confidence	XDim,YDim	FLOAT32	None	None	No data=-9999.0 Valid data = 0.0 - 1.0
NumberPixelsCloudHC_BestEst Number of 1.1km subregions that were counted in the CombinedFractionCloud* fields.	XDim,YDim	FLOAT32	None	None	No data = -9999 Valid data = 0 - 256
FractionRetrievedStereoHeight Fractional area that had a valid stereoscopically retrieved value for the BestWind heights.	XDim,YDim	FLOAT32	None	None	No data = -9999 Valid data = 0.0 – 1.0
FractionDefaultStereoHeight Fractional area that had a default (surface height fill-in) value for the BestWind heights.	XDim,YDim	FLOAT32	None	None	No data = -9999 Valid data = 0.0 – 1.0
FractionNoRetrievalStereoHeight Fractional area that had a NoRetrieval for the BestWind height.	XDim,YDim	FLOAT32	None	None	No data = -9999 Valid data = 0.0 – 1.0
FractionNoRetrievalPrelimStereoHeight Fractional area that had a NoRetrieval for the preliminary BestWind height.	XDim,YDim	FLOAT32	None	None	No data = -9999 Valid data = 0.0 – 1.0
FractionNoRetrievalASCM Fractional area that had a NoRetrieval for the Angular Signature Cloud Mask**.**	XDim,YDim	FLOAT32	None	None	No data = -9999 Valid data = 0.0 – 1.0
FractionNoRetrievalFR_RCCM Fractional area that had a NoRetrieval for the feature-referenced Radiometric Camera-by-camera Cloud Mask.	XDim,YDim	FLOAT32	None	None	No data = -9999 Valid data = 0.0 – 1.0
FractionLandPixels Fraction of 1.1 km subregions classified as land	XDim,YDim	FLOAT32	None	None	No data=-9999.0 Valid data = 0.0 - 1.0
AveragePrelimCloudHeight Average preliminary (BestWind) cloud height for this region.	XDim,YDim	INT16	Meters	None	No data = -9999
MedianPrelimCloudHeight Median preliminary (BestWind) cloud height for this region.	XDim,YDim	INT16	Meters	None	No data = -9999
AveragePrelimCloudHeightAboveSurface Average value of (preliminary (BestWind) cloud height – surface height) for this region.	XDim,YDim	INT16	Meters	None	No data = -9999
MedianPrelimCloudHeightAboveSurface Median value of (preliminary (BestWind) cloud height – surface height) for this region.	XDim,YDim	INT16	Meters	None	No data = -9999

NumberPixelsAvgMdianHeights Number of 1.1km cloud heights that went into the calculations of average and median cloud heights.	XDim,YDim	INT16	None	None	No data = -9999
FractionRCCMCloudHC Fraction of RCCM pixels that are CloudHC (calculated indepen dently for all 9 angles) Derived from the terrain-referenced RCCM (output of L1B3).	XDim,YDim, NCamDim	9 X FLOAT32	None	None	No data=-9999.0 Valid data = 0.0 - 1.0
FractionRCCMCloudLC Fraction of RCCM pixels that are CloudLC (calculated indepen dently for all 9 angles) Derived from the terrain-referenced RCCM (output of L1B3).	XDim,YDim, NCamDim	9 X FLOAT32	None	None	No data=-9999.0 Valid data = 0.0 - 1.0
FractionRCCMNoRetrieval Fraction of RCCM pixels that do not have a retrieval (calculated independently for all 9 angles) Derived from the terrain-refer enced RCCM (output of L1B3).	XDim,YDim, NCamDim	9 X FLOAT32	None	None	No data=-9999.0 Valid data = 0.0 - 1.0
PrelimSDCMCloudHCByHeight Fraction of 1.1km Preliminary SDCM pixels that are CloudHC (binned into 5 height classes) Derived from the BestWinds PrelimSDCM.	XDim,YDim, NAltitudeDim	5 X FLOAT32	None	None	No data=-9999.0 Valid data = 0.0 - 1.0
PrelimSDCMCloudLCByHeight Fraction of 1.1km Preliminary SDCM pixels that are CloudLC (binned into 5 height classes). Derived from the BestWinds Pre-limSDCM.	XDim,YDim, NAltitudeDim	5 X FLOAT32	None	None	No data=-9999.0 Valid data = 0.0 - 1.0
PrelimSDCMClearLCByHeight Fraction of 1.1km Preliminary SDCM pixels that are ClearLC (NearSurface) (binned into 5 height classes). Derived from the BestWinds PrelimSDCM.	XDim,YDim, NAltitudeDim	5 X FLOAT32	None	None	No data=-9999.0 Valid data = 0.0 - 1.0
PrelimSDCMClearHCByHeight Fraction of 1.1km Preliminary SDCM pixels that are ClearHC (binned into 5 height classes). Derived from the BestWinds Pre-limSDCM.	XDim,YDim, NAltitudeDim	5 X FLOAT32	None	None	No data=-9999.0 Valid data = 0.0 - 1.0
PrelimSDCMNoRetrievalByHeight Fraction of 1.1km SDCM pixels that are lacking a retrieval (binned into 5 height classes). Derived from the BestWinds Prelim SDCM.	XDim,YDim, NAltitudeDim	5 X FLOAT32	None	None	No data=-9999.0 Valid data = 0.0 - 1.0
SDCMCloudHCByHeight Fraction of 1.1km SDCM pixels that are CloudHC (binned into 5 height classes) Derived from the BestWinds SDCM.	XDim,YDim, NAltitudeDim	5 X FLOAT32	None	None	No data=-9999.0 Valid data = 0.0 - 1.0
SDCMCloudLCByHeight Fraction of 1.1km SDCM pixels that are CloudLC (binned into 5 height classes).	XDim,YDim, NAltitudeDim	5 X FLOAT32	None	None	No data=-9999.0 Valid data = 0.0 - 1.0

Derived from the BestWinds SDCM.					
SDCMClearLCByHeight Fraction of 1.1km SDCM pixels that are ClearLC (NearSurface) (binned into 5 height classes). Derived from the BestWinds SDCM.	XDim,YDim, NAltitudeDim	5 X FLOAT32	None	None	No data=-9999.0 Valid data = 0.0 - 1.0
SDCMClearHCByHeight Fraction of 1.1km SDCM pixels that are ClearHC (binned into 5 height classes). Derived from the BestWinds SDCM.	XDim,YDim, NAltitudeDim	5 X FLOAT32	None	None	No data=-9999.0 Valid data = 0.0 - 1.0
SDCMNoRetrievalByHeight Fraction of 1.1km SDCM pixels that are lacking a retrieval (binned into 5 height classes). Derived from the BestWinds SDCM.	XDim,YDim, NAltitudeDim	5 X FLOAT32	None	None	No data=-9999.0 Valid data = 0.0 - 1.0
ASCMCloudHCByHeight Fraction of 1.1km ASCM pixels that are CloudHC (binned into 5 height classes).	XDim,YDim, NAltitudeDim	5 X FLOAT32	None	None	No data=-9999.0 Valid data = 0.0 - 1.0
ASCMCloudLCByHeight Fraction of 1.1km ASCM pixels that are CloudLC (binned into 5 height classes).	XDim,YDim, NAltitudeDim	5 X FLOAT32	None	None	No data=-9999.0 Valid data = 0.0 - 1.0
ASCMClearLCByHeight Fraction of 1.1km ASCM pixels that are ClearLC (NearSurface) (binned into 5 height classes).	XDim,YDim, NAltitudeDim	5 X FLOAT32	None	None	No data=-9999.0 Valid data = 0.0 - 1.0
ASCMClearHCByHeight Fraction of 1.1km ASCM pixels that are ClearHC (binned into 5 height classes).	XDim,YDim, NAltitudeDim	5 X FLOAT32	None	None	No data=-9999.0 Valid data = 0.0 - 1.0
ASCMNoRetrievalByHeight Fraction of 1.1km ASCM pixels that are lacking a retrieval (binned into 5 height classes).	XDim,YDim, NAltitudeDim	5 X FLOAT32	None	None	No data=-9999.0 Valid data = 0.0 - 1.0
RCCM_FrCloudHCByHeight Fraction of 1.1km RCCM_An pixels that are CloudHC (binned into 5 height classes). Derived from the (BestWinds) Feature-Referenced RCCM found in the stereo product	XDim,YDim, NAltitudeDim	5 X FLOAT32	None	None	No data=-9999.0 Valid data = 0.0 - 1.0
RCCM_FrCloudLCByHeight Fraction of 1.1km RCCM_An pixels that are CloudLC (binned into 5 height classes). Derived from the (BestWinds) Feature-Referenced RCCM found in the stereo product	XDim,YDim, NAltitudeDim	5 X FLOAT32	None	None	No data=-9999.0 Valid data = 0.0 - 1.0
RCCM_FrClearLCByHeight Fraction of 1.1km RCCM_An pixels that are ClearLC (binned into 5 height classes). Derived from the (BestWinds) Feature-Referenced RCCM found in the stereo product	XDim,YDim, NAltitudeDim	5 X FLOAT32	None	None	No data=-9999.0 Valid data = 0.0 - 1.0

RCCM_FrClearHCByHeight Fraction of 1.1km RCCM_An pixels that are ClearHC (binned into 5 height classes). Derived from the (BestWinds) Feature-Referenced RCCM found in the stereo product	XDim,YDim, NAltitudeDim	5 X FLOAT32	None	None	No data=-9999.0 Valid data = 0.0 - 1.0
RCCM_FrNoRetrieval ByHeight Fraction of 1.1km RCCM_An pixels that are lacking a retrieval (binned into 5 height classes). Derived from the (BestWinds) Feature-Referenced RCCM found in the stereo product	XDim,YDim, NAltitudeDim	5 X FLOAT32	None	None	No data=-9999.0 Valid data = 0.0 - 1.0
SupportVectorCirrusFraction_17.6_km (Spatial Resolution: 17.6km x 17.6km, XDim=8, YDim=32)					
SVMCirrusFraction Percentage of this pixel that contains cirrus clouds.	XDim,YDim	UINT8	None	None	0 = NoCirrus, 100 = Entirely Cirrus, Valid data = 0 - 100
CloudClassifiers_35.2km *(*Spatial Resolution: 35.2km x 35.2km, XDim=4, YDim=16*)*					
ConsensusCloudMaskCoarseResolution ConsensusCloudClassifier calculated from SDCM,RCCM, ASCM	XDim,YDim	UINT8	None	None	NoRetrieval = 0; Overcast = 1; KnownCloud = 2; KnownClear = 3;
ConsensusOvercastMask CoarseResolution_BestWind OverCast Mask calculated using BestWinds versions of SDCM and FRRCCM (and ASCM).	XDim,YDim	UINT8	None	None	NotOvercast = 0; Overcast = 1;
ConsensusOvercastMaskCoarse Resolution_WithoutWind OverCast Mask calculated using WithoutWinds versions of SDCM and FRRCCM. (and ASCM)	XDim,YDim	UINT8	None	None	NotOvercast = 0; Overcast = 1;
MaxRegionalHeightCoarseResolution_ BestWind Maximum BestWinds Stereo Height in this 35.2km pixel. Only calculated when corresponding OverCast mask is true.	XDim,YDim	INT16	None	None	No data = -9999
MaxRegionalHeightCoarseResolution_ ZeroWind Maximum WithoutWinds Stereo Height in this 35.2km pixel. Only calculated when corresponding OverCast mask is true.	XDim,YDim	INT16	None	None	No data = -9999

7.6.7 Per-grid QA Metadata

Table 7-14: Per-grid QA Metadata for Cloud Classification Products

Data Field Name	Data Type	Field Dimensions	Valid Range
SwathQaGlobal: Swath-level Constructs			
NNonFillSubregions	INT32	--	0 - 2272
NNonFillSolarOblique	INT32	--	0 - 2272
Block-level Constructs			
BlockNumber	INT32	--	1 - 180
ValidRecord	UINT8	--	0, 1
TPGeomDataQualInd	FLOAT64	NCAM	-1 - 1
NSubAscmNR	INT32	--	0 - 65,536
NSubAscmOverride	INT32	--	0 - 65,536

7.7 MISR LEVEL 2 MIL2TCAL CLOUD ALBEDO PRODUCT

7.7.1 File Metadata Description

Table 7-15: File Metadata for Cloud Albedo Product Files

File Metadata Field Name	Definition	Data Type	Units	Valid Range
Path_number	Orbit path number	INT32	N/A	1-233
AGP_version_id	Version identifier for AGP	INT32	N/A	2
DID_version_id	Version Identifier for DID (DTED Digital Terrain Elevation Dataset] Intermediate Dataset)	INT32	N/A	4
Number_blocks	Total number of blocks	INT32	N/A	1-180
Ocean_blocks_size	Ocean_blocks.number dimension	INT32	N/A	1-180
Ocean_blocks.count	Total number of blocks containing entirely ocean radiances	INT32	N/A	1-180
Ocean_blocks.numbers	List of block numbers containing entirely ocean radiances	180 x INT32	N/A	1-180
SOM_parameters.som_ellipsoid.a	Semimajor axis of ellipsoid	FLOAT64	meters	WGS84 ellipsoid (6.3781370E+06)
SOM_parameters.som_ellipsoid.e2	Eccentricity of ellipsoid squared	FLOAT64	N/A	WGS84 ellipsoid (6.6943480E-03)
SOM_parameters.som_orbit.aprime	Semimajor axis of orbit	FLOAT64	meters	1.0
SOM_parameters.som_orbit.eprime	Eccentricity of orbit	FLOAT64	N/A	1.0
SOM_parameters.som_orbit.gama	Longitude of perigee	FLOAT64	radians	1.0
SOM_parameters.som_	Number of revolutions per ground track repeat	INT32	N/A	233

orbit.nrev	cycle			
SOM_parameters.som_orbit.ro	Radius of circular orbit	FLOAT64	meters	7.0780408E+06
SOM_parameters.som_orbit.i	Inclination of orbit (degrees)	FLOAT64	radians	1.7157253
SOM_parameters.som_orbit.P2P1	Ratio of time of revolution over length of Earth rotation/orbit	FLOAT64	N/A	6.8666667E-02
SOM_parameters.som_orbit.lambda0	Geodetic longitude of ascending node at time 0 (degrees)	FLOAT64	radians	-2π: 2π
Origin_block.ulc.x	SOM X coordinate (in meters) of the upper left corner of the first block	FLOAT64	meters	
Origin_block.ulc.y	SOM Y coordinate (in meters) of the upper left corner of the first block	FLOAT64	meters	
Origin_block.lrc.x	SOM X coordinate (in meters) of the lower right corner of the first block	FLOAT64	meters	
Origin_block.lrc.y	SOM Y coordinate (in meters) of the lower right corner of the first block	FLOAT64	meters	
Start_block	The block number in the AGP which corresponds to the first block in this file containing data.	INT32	N/A	1 - 180 Start_block < End block
End block	The block number in the AGP which corresponds to the last block in this file containing data.	INT32	N/A	1 - 180 Start_block < End block
Cam_mode	Indicates whether the data in this grid file was obtained in MISR global mode or local mode.	INT32	N/A	0-1 1 = global 0 = local
Num_local_modes	The number of MISR local mode acquisitions contained in this file.	INT32	N/A	0-6 0 if data is global mode
Local_mode_site_name	The geographical name of the first local mode site contained in this file.	CHAR8	N/A	string of up to 12 characters, including null
Orbit_QA	Indication of the overall quality of the orbit data based on analysis of quality flags in the spacecraft attitude and ephemeris data. Geolocation accuracy may be impaired for orbits with poor quality orbit data.	FLOAT32	N/A	-9999.0 = NoRetrieval, -1.0 = Poor, 0.0 = Nominal

7.7.2 Per-grid Metadata Description

Table 7-16: Per-grid Metadata for Cloud Albedo Product Files

Common Grid Metadata	Definition	Data Type	Valid Values
Block_size.resolution_x	Resolution of block x dimension in meters	INT32	2200, 17600, 35200
Block_size.resolution_y	Resolution of block y dimension in meters	INT32	2200, 17600, 35200
Block_size.size_x	Block x dimension	INT32	64, 8, 4

Block_size.size_y	Block y dimension	INT32	256, 32, 16

7.7.3 Per-block Metadata Description

Table 7-17: Per-block Metadata for Cloud Albedo Product Files

PerBlockMetadataCommon	Definition	Data Type	Valid Values
Block_number	Current block number	INT32	1-180
Ocean_flag	Flag signalling whether the block contains entirely ocean radiances	INT8	0 = block has no ocean or is a mix of ocean and land 1 = block is entirely ocean
Block_coor_ulc_som_meter.x	Upper left corner SOM block x coordinate in meters	FLOAT64	
Block_coor_ulc_som_meter.y	Upper left corner SOM block y coordinate in meters	FLOAT64	
Block_coor_lrc_som_meter.x	Lower right corner SOM block x coordinate in meters	FLOAT64	
Block_coor_lrc_som_meter.y	Lower right corner SOM block y coordinate in meters	FLOAT64	
Data_flag	Flag signalling whether the block contains entirely fill data	INT8	0 = block contains entirely fill data 1 = block contains valid data

Common Per Block Metadata	Definition	Data Type	Valid Values
Geometric DQI	Geometric Data Quality Indicator copied from the L1B2 Terrainprojected parameter file.	INT32	-1 to 1

PerBlockMetadataTime	Definition	Data Type	Valid Values
BlockCenterTime	Imaging time for the block center (AN Camera) in UTC.	CHAR8	

7.7.4 Per-line Metadata Description

None.

7.7.5 Per-pixel Metadata Description

None.

7.7.6 Grid Data Set Descriptions

In order to minimize storage for the TOA/Cloud Product, many logical parameters will be packed so that each bit represents a logical value, or some number of bits within a byte or word represent a flag value.

To facilitate the interpretation of scientific data, floating point values are not scaled. Floating point values, and some integer values, may take on a flag value indicating invalid data. Currently, there is only a single flag value of -9999.0, representing missing floating point data. Missing integer data may be represented either by a value of 0 (for flag data) or -9999 (for measured data) or -99 (for measured byte integer data). Note that we may later add more flag values to distinguish the reason that the data are missing (e.g. never computed, arithmetic error, overflow, etc.).

Table 7-18: Cloud Albedo Product Field Dimension Descriptions

Dimension	Description	Valid Values
SOMBlockDim	*SOMBlockDim* is the number of SOM blocks in the file. The slowest-varying dimension is implicitly the SOM block dimension. It is not shown in the tables below.	this can vary, with a typical value being approximately 140
XDim	*XDim* is the number of lines in a block. The x dimension direction is identical to the standard SOM x dimension.	128 for 1.1 km parameters 64 for 2.2 km parameters 8 for 17.6 km parameters 4 for 35.2 km parameters 2 for 70.4 km parameters
YDim	*YDim* is the number of samples in a block. The y dimension direction is identical to the standard SOM y dimension.	512 for 1.1 km parameters 256 for 2.2 km parameters 32 for 17.6 km parameters 16 for 35.2 km parameters 8 for 70.4 km parameters
NCamDim	NCamDim distinguishes the individual nine cameras	1-9. DF=1, CF=2, BF=3, AF=4, AN=5, AA=6, BA=7,CA=8, DA=9
NBandDim	NBandDim distinguishes the individual four camera bands	1-4. Blue=1, Green=2, Red=3, NIR=4.

Table 7-19: Cloud Albedo Product Grid Dataset Descriptions

Field Name Parameter Description	Dimension List	Number Type	Units	Transformation	Flag Values
ReflectingLevelParameters_2.2_km : (Spatial Resolution: 2.2 km x 2.2 km, XDim = 64, YDim = 256)					
AlbedoLocal Local TOA albedo (4 bands)	XDim,YDim, NBandDim	4 X FLOAT32	None	None	No data=-9999.0
AlbedoLocalBroadband Broadband Equivalent of Local Albedo	XDim,YDim	FLOAT32	None	None	No data = -9999.0
NumUnobscuredTop Number of unobscured top pixels (9 angles)	XDim,YDim, NCamDim	9 X INT8	None	None	No data=-99 or -98
BRFTop_Mean	XDim,YDim,	4 X 9 X	None	None	No data=-9999.0 pr -

Top BRF referenced to RLRA. (4 bands X 9 angles)	NBandDim, NCamDim	FLOAT32			9998.0
FlagCamFillTop Source Flag for Top BRF's indicating whether or not BRF was filled-in or not. (4 bands x 9 angles)	XDim,YDim, NBandDim, NCamDim	4 X 9 X UINT8	None	None	0 = Not-Filled-In or no data, 1 = Filled-In
NumUnobscuredSide Number of unobscured side pixels (9 angles)	XDim,YDim, NCamDim	9 X INT16	None	None	No data=-9999 or -9998
BRFSide_Mean Side BRF referenced to RLRA (4 bands X 9 angles)	XDim,YDim, NCamDim, NBandDim	4 X 9 X FLOAT32	None	None	No data=-9999.0 or -9998.0
FlagCamFillSide Source Flag for Side BRF's indicating whether or not BRF was filled-in or not. (4 bands x 9 angles)	XDim,YDim, NBandDim, NCamDim	4 X 9 X UINT8	None	None	0 = Not-Filled-In or no data, 1 = Filled-In
LocalAlbedoMethodandSAW Reason Local albedo contribution methodology/Reasons for solid angle weighting (4 bands X 9 angles)	XDim,YDim, NBandDim, NCamDim	4 X 9 X UINT8	None	None	No Retrieval=0; Cloudy Deterministic=1; Cloudy Stochastic=2; Clear Deterministic=3; Solid Angle Weighting SAW - sun overhead=4; SAW (nadir camera)=5; SAW - Cloudy criteria not met=7; SAW - Clear, too few angles to try=8; SAW - Clear, too few angles to match=9; SAW - Clear angle doesn't match=10; SAW - AZM undetermined=11; No Df/Da camera data=12; No contri-bution found = 15;
GLDVStdDevTotal First top texture index computed from the standard deviation of all BRF's assigned to the top of a given RLRA column. (9 angles).	XDim,YDim, NCamDim	9 X FLOAT32	None	None	No data=-9999.0
GLDVStdDevAlong Second top texture index computed from the along-track standard deviation of BRF's assigned to the top of a given RLRA column. (9 angles)	XDim,YDim, NCamDim	9 X FLOAT32	None	None	No data=-9999.0
GLDVStdDevAcross Third top texture index computed	XDim,YDim, NCamDim	9 X FLOAT32	None	None	No data=-9999.0

from the cross-track standard deviation of BRF's assigned to the top of a given RLRA column. (9 angles)					
RLRAInterpolated The RLRA used in the reprojection of the BRF's up to the RLRA after interpolation to fill in all the missing values.	XDim,YDim	FLOAT32	metres	None	No data = -9999.0
CloudyClearDesignation Cloudy/clear and cloud phase designation	XDim,YDim	UINT8	None	None	No Retrieval/ Undetermined=0; Clear=1; Cloudy: liquid cloud phase=2; Cloudy:ice cloud phase=3; Cloudy:unknown cloud phase=4.
HighCloudIndicator High cloud indicator	XDim,YDim	UINT8	None	None	No Retrieval=0; High Cloud Present=1; High Cloud Not Present=2; High Cloud Undeter-mined=3
CloudyClearSource cloud phase source	XDim,YDim	UINT8	None	None	No Retrieval=0; MODIS=1; TASC: other out-of-bounds=2; TASC; other not available=3
CloudLiquidProbability Probability that the cloud phase is liquid.	XDim,YDim	UINT8	None	None	0-100, No data = -99
CloudTopTemperature Cloud-top temperature	XDim,YDim	FLOAT32	Deg. Celcius	None	No data=-9999.0
FlagCloudPhaseOverride Cloud phase override flag (8 off-nadir angles, 4 bands)	XDim,YDim, NBandDim	4 X UINT8	None	Pack lowest bit of override flag for all 8 offnadir cameras into bits 1-8	None
CloudTexture Texture of the cloud-top as determined by looking at the GLDVStDevTotal.	XDim,YDim	UINT8	None	None	No Retrieval=0; Homogeneous=1; Heterogeneous=2
HomogeneityReferenceCam Homogeneity reference camera used in determining the CloudTexture flag.	XDim,YDim	UINT8	None	None	No Retrieval=0; Bf=3; Af=4; An=5; Aa=6; Ba=7
SurfaceType Surface type	XDim,YDim	UINT8	None	None	No Retrieval=0; Water=1; Vegetated Land=2; Non-Vegetated Land=3; Snow/ice = 4

CSSCSurfaceType Corresponding Surface Type from the CloudScreeningSurface Classification Dataset.	XDim,YDim	INT16	None	None	No data = -9999, 0 = Water 1-1580 = Land
IndexSolarZenith Solar zenith angle index	XDim,YDim	INT8	None	None	No Retrieval=-99, 1-15.
IndexViewingZenith View zenith angle index for each camera	XDim,YDim, NCamDim	9 x INT8	None	None	No Retrieval=-99, 1-2.
IndexBlueAltitude Blue band altitude bin index	XDim,YDim	INT8	None	None	No Retrieval=-99, 1-4.
IndexGreenAltitude Green band altitude bin index	XDim,YDim	INT8	None	None	No Retrieval=-99, 1-4.
IndexBrightness Brightness index, 9 cameras	XDim,YDim, NCamDim	9 X INT8	None	None	No Retrieval=-99, 1-13.
IndexIgloo Igloo index (off-nadir cameras)	XDim,YDim	UINT8	None	Pack lowest bit from each camera into 8 bits	No Retrieval = 0, Forward Scatter = 1, Backward Scatter = 2
RelativeAzimuthBinInterpolator Relative azimuth angle bin + interpolation fraction.	XDim,YDim, NCamDim	9 X FLOAT32	None	Integer portion = lower of 2 surrounding relative azimuth angle bins. Remainder = interpolation fraction between this bin and the higher one.	No Retrieval = -9999.0 0.0 - 7.0
ClearSkyR0 Clear sky local albedo R0 parameter (4 bands)	XDim,YDim, NBandDim	4 X FLOAT32	None	None	No data=-9999.0
ClearSkyKappa Clear sky local albedo Kappa parameter (4 bands)	XDim,YDim, NBandDim	4 X FLOAT32	None	None	No data=-9999.0
ClearSkyBeta Clear sky local albedo Beta parameter (4 bands)	XDim,YDim, NBandDim	4 X FLOAT32	None	None	No data=-9999.0
ClearSkyCameras Channels used in clear-sky fits (4 bands X 9 angles)	XDim,YDim, NBandDim	4 X UINT16	None	Pack lowest bit from each camera into lowest 9 bits, for each band	None
ClearSkyChiSquare Camera-averaged chi-square for clear-sky fits (4 bands)	XDim,YDim, NBandDim	4 X FLOAT32	None	None	No data=-9999.0
GeometricParameters_17.6_km: (Spatial Resolution: 17.6 km x 17.6 km, XDim =8, YDim = 32)					
SolarZenithAngle Solar zenith angle	XDim,YDim	FLOAT32	degs	None	No data=-9999.0
ViewZenithAngle	XDim,YDim,	9 X	degs	None	No data=-9999.0

View zenith angle (9 angles)	NCamDim	FLOAT32			
RelativeAzimuthAngle View-Sun relative azimuth angle (9 angles)	XDim,YDim, NCamDim	9 X FLOAT32	degs	None	No data=-9999.0
AlbedoParameters_35.2_km: (Spatial Resolution: 35.2 km x 35.2 km, XDim = 4, YDim = 16)					
AlbedoExpansive Expansive albedo (4 bands)	XDim,YDim, NBandDim	4 X FLOAT32	None	None	No data=-9999.0
AlbedoRestrictive Total restrictive albedo (4 bands)	XDim,YDim, NBandDim	4 X FLOAT32	None	None	No data=-9999.0
AlbedoExpansiveBroadband Broadband albedo calculated from a linear combination of all four spectral Expansive Albedo measurements.	XDim,YDim	FLOAT32	None	None	No data=-9999.0
AlbedoRestrictiveBroadband Broadband albedo calculated from a linear combination of all four spectral Restrictive Albedo measurements.	XDim,YDim	FLOAT32	None	None	No data=-9999.0
SolarZenithCosineRegional Regional mean solar zenith angle cosine	XDim,YDim	FLOAT32	None	None	No data=-9999.0
NumLocalAlbedoGood Number of pixels with successful calculation of local albedo.	XDim,YDim, NBandDim	4 x INT16	None	None	No data = -9999 Valid data = 0 - 256
NumLocalAlbedoGood NoCamFill Number of pixels that did not contain any filled-in BRF's with successful calculation of local albedo.	XDim,YDim, NBandDim	4 x INT16	None	None	No data = -9999 Valid data = 0 - 256
LocalAlbedo_Mean Average value of local albedo over this region.	XDim,YDim, NBandDim	4 x FLOAT32	None	None	No data = -9999.0
LocalAlbedo_StdDev Standard deviation of all local albedos in this region.	XDim,YDim, NBandDim	4 x FLOAT32	None	None	No data = -9999.0
LocalAlbedoNoCamFill_Mean Average value of all local albedo pixels which did not contain any filled-in BRF's.	XDim,YDim, NBandDim	4 x FLOAT32	None	None	No data = -9999.0
LocalAlbedoNoCamFill_StdDev Standard deviation of all local albedos in this region that did not contain any filled-in BRF's.	XDim,YDim, NBandDim	4 x FLOAT32	None	None	No data = -9999.0
NumDeterministicSucceeded Number of pixels for which deterministic modelling of a local albedo component succeeded, tabulated separately for each band	XDim,YDim, NBandDim, NCamDim	4 x 9 x INT16	None	None	No data = -9999 Valid data = 0 - 256

and camera.					
NumDeterministicFailed Number of pixels for which deterministic modelling of a local albedo component failed, tabulated separately for each band and camera.	XDim,YDim, NBandDim, NCamDim	4 x 9 x INT16	None	None	No data = -9999 Valid data = 0 - 256
NumStochasticSucceeded Number of pixels for which stochastic modelling of a local albedo component succeeded, tabulated separately for each band and camera.	XDim,YDim, NBandDim, NCamDim	4 x 9 x INT16	None	None	No data = -9999 Valid data = 0 - 256
NumStochasticFailed Number of pixels for which stochastic modelling of a local albedo component failed, tabulated separately for each band and camera.	XDim,YDim, NBandDim, NCamDim	4 x 9 x INT16	None	None	No data = -9999] Valid data = 0 - 256
RestrictiveAlbedoTop Restrictive albedo top-leaving term (4 bands)	XDim,YDim, NBandDim	4 X FLOAT32	None	None	No data=-9999.0
RestrictiveAlbedoSide Side-leaving contribution at each angle (4 bands X 9 angles)	XDim,YDim, NBandDim, NCamDim	4 X 9 X FLOAT32	None	None	No data=-9999.0
NumSubRestrictiveAlbedoTop Number of subregions contributing to top-leaving term (4 bands)	XDim,YDim, NBandDim	4 X UINT16	None	None	No data=65533 Valid data = 0 - 256
NumSubRestrictiveAlbedoSide Number of subregions contributing to side-leaving term (4 bands X 9 angles)	XDim,YDim, NBandDim, NCamDim	4 X 9 X UINT16	None	None	No data=65533 Valid data = 0 - 256
FlagRestrictiveAlbedoSide Camera angles contributing to sideleaving term (4 bands X 9 angles)	XDim,YDim	4 X UINT16	None	Pack lowest bit from each camera into lowest 9 bits, for each band	None.
NumSubExpansiveConsidered Number of subregions considered during summation	XDim,YDim	INT32	None	None	No data=-9999 Block not processed= -8888
NumSubExpansiveUsed Number of subregions actually included in summation (4 bands)	XDim,YDim, NBandDim	4 X INT32	None	None	No data=-9999 or -8888 (block not processed)
NumSubExpansiveMissBRFTop Number of subregions eliminated due to missing top-leaving term (4 bands)	XDim,YDim, NBandDim	4 X INT32	None	None	No data=-9999 or -8888 (block not processed)
NumSubExpansiveMissBRFSide Number of subregions eliminated due to missing side-leaving term (4 bands)	XDim,YDim, NBandDim	4 X INT32	None	None	No data=-9999 or -8888 (block not processed)

NumSubExpansiveBadObscTop Number of subregions eliminated due to obscured top-leaving term (4 bands)	XDim,YDim, NBandDim	4 X INT32	None	None	No data=-9999 or -8888 (block not processed)
NumSubExpansiveBadObscSide Number of subregions eliminated due to obscured side-leaving term (4 bands)	XDim,YDim, NBandDim	4 X INT32	None	None	No data=-9999 or -8888 (block not processed)
NumSubExpansiveOblique Number of subregions eliminated due to sun angle too oblique	XDim,YDim	INT32	None	None	No data=-9999 Block not processed= -8888
FractionExpansive ClearHighConf Fractional area contributing to the expansive albedo classified as Clear HC	XDim,YDim	FLOAT32	None	None	No data=-9999.0
FractionExpansive ClearLowConf Fractional area contributing to the expansive albedo classified as Clear LC	XDim,YDim	FLOAT32	None	None	No data=-9999.0

7.7.7 Per-grid QA Metadata

Table 7-20: Per-grid QA Metadata for Cloud Albedo Products

Data Field Name	Data Type	Field Dimensions	Valid Range
SwathQaGlobal: Swath-level Constructs			
NNonFillTopBRF	INT32	NBAND	0 - 2,326,528
NSuccLocalAlbedo	INT32	NBAND	0 - 2,326,528
NCldySkyContribLocalAlbedo	INT32	NBAND	0 - 2,326,528
NClrSkyContribLocalAlbedo	INT32	NBAND	0 - 2,326,528
NSAWOnlyLocalAlbedo	INT32	NBAND	0 - 2,326,528
NRLRASubWGoodMODISCldPhase	INT32	--	0 - 2,326,528
NRLRASubWBadMODISCldPhase	INT32	--	0 - 2,326,528
NRLRASubWNAMODISCldPhase	INT32	--	0 - 2,326,528
NNonFill35kmReg	INT16	NBAND	0 - 9088
NSuccRestAlbedo	INT16	NBAND	0 - 9088
NSuccExpAlbedo	INT16	NBAND	0 - 9088
BlockQaGlobal: Block-level Constructs			
BlockNumber	INT32	--	1 - 180
ValidRecord	UINT8	--	0, 1
TpGeomDataQualInd	FLOAT64	NCAM	-1 - 1
UpLeftCornerLat	FLOAT64	--	-90 - 90

UpLeftCornerLong	FLOAT64	--	-180 - 180
UpRightCornerLat	FLOAT64	--	-90 - 90
UpRightCornerLong	FLOAT64	--	-180 - 180
LowLeftCornerLat	FLOAT64	--	-90 - 90
LowLeftCornerLong	FLOAT64	--	-180 - 180
LowRightCornerLat	FLOAT64	--	-90 - 90
LowRightCornerLong	FLOAT64	--	-180 - 180
NumRlraFilled	INT32	--	0 - 16,384
NumPixSucceedTop	INT32	NCAM	0 - 16,384
NumPixSucceedSider	INT32	NCAM	0 - 16,384
NumPixNoLookVector	INT32	NCAM	0 - 16,384
NumPixNoBrfBlue	INT32	NCAM	0 - 16,384
NumPixNoBrfGreen	INT32	NCAM	0 - 16,384
NumPixNoBrfRed	INT32	NCAM	0 - 16,384
NumPixNoBrfNIR	INT32	NCAM	0 - 16,384
NAZMCldLiquidPhase	INT16	--	0 - 16,384
NAZMCldIcePhase	INT16	--	0 - 16,384
NAZMCldUnknownPhase	INT16	--	0 - 16,384
NAZMClr	INT16	--	0 - 16,384
NAZMUndetermined	INT16	--	0 - 16,384
NNoFillAZMCldLiquidPhase	INT16	--	0 - 16,384
NNoFillAZMCldIcePhase	INT16	--	0 - 16,384
NNoFillAZMCldUnknownPhase	INT16	--	0 - 16,384
NNoFillAZMClr	INT16	--	0 - 16,384
NNoFillAZMUndetermined	INT16	--	0 - 16,384
NAZMCldUnknownOverridWLiquid	INT16	--	0 - 16,384
NSnowIceSub	INT16	--	0 - 16,384
NWaterSub	INT16	--	0 - 16,384
NVegetated	INT16	--	0 - 16,384
NNonVegetatedLandSub	INT16	--	0 - 16,384
NAZMCldSnowIceSub	INT16	--	0 - 16,384
NAZMCldWaterSub	INT16	--	0 - 16,384
NAZMCldVegetatedLandSub	INT16	--	0 - 16,384
NAZMCldNonVegetatedLandSub	INT16	--	0 - 16,384
NNoFillAZMCldSnowIceSub	INT16	--	0 - 16,384
NNoFillAZMCldWaterSub	INT16	--	0 - 16,384
NNoFillAZMCldVegetatedLandSub	INT16	--	0 - 16,384
NNoFillAZMCldNonVegetatedLandSub	INT16	--	0 - 16,384
NHighCldPresentSub	INT16	--	0 - 16,384
NHighCldNotPresentSub	INT16	--	0 - 16,384
NHighCldUndeterminedSub	INT16	--	0 - 16,384

NSubWHomogenRefCamAn	INT16	--	0 - 16,384
NSubWHomogenRefCamAf	INT16	--	0 - 16,384
NSubWHomogenRefCamAa	INT16	--	0 - 16,384
NSubWHomogenRefCamBf	INT16	--	0 - 16,384
NSubWHomogenRefCamBa	INT16	--	0 - 16,384
NSubWHomogenRefCamNA	INT16	--	0 - 16,384
NSubHomogeneousTexture	INT16	--	0 - 16,384
NSubHeterogeneousTexture	INT16	--	0 - 16,384
NSubTextureNA	INT16	--	0 - 16,384
NBlueSubNoLocalAttempted	INT16	NCAM	0 - 16,384
NBlueSubLocalUsingDetermCld	INT16	NCAM	0 - 16,384
NBlueSubLocalUsingStochastCld	INT16	NCAM	0 - 16,384
NBlueSubLocalUsingDetermClr	INT16	NCAM	0 - 16,384
NBlueSubLocalUsingSAW	INT16	NCAM	0 - 16,384
NBlueSubLocalNotSucc	INT16	NCAM	0 - 16,384
NGreenSubNoLocalAttempted	INT16	NCAM	0 - 16,384
NGreenSubLocalUsingDetermCld	INT16	NCAM	0 - 16,384
NGreenSubLocalUsingStochastCld	INT16	NCAM	0 - 16,384
NGreenSubLocalUsingDetermClr	INT16	NCAM	0 - 16,384
NGreenSubLocalUsingSAW	INT16	NCAM	0 - 16,384
NGreenSubLocalNotSucc	INT16	NCAM	0 - 16,384
NRedSubNoLocalAttempted	INT16	NCAM	0 - 16,384
NRedSubLocalUsingDetermCld	INT16	NCAM	0 - 16,384
NRedSubLocalUsingStochastCld	INT16	NCAM	0 - 16,384
NRedSubLocalUsingDetermClr	INT16	NCAM	0 - 16,384
NRedSubLocalUsingSAW	INT16	NCAM	0 - 16,384
NRedSubLocalNotSucc	INT16	NCAM	0 - 16,384
NNIRSubNoLocalAttempted	INT16	NCAM	0 - 16,384
NNIRSubLocalUsingDetermCld	INT16	NCAM	0 - 16,384
NNIRSubLocalUsingStochastCld	INT16	NCAM	0 - 16,384
NNIRSubLocalUsingDetermClr	INT16	NCAM	0 - 16,384
NNIRSubLocalUsingSAW	INT16	NCAM	0 - 16,384
NNIRSubLocalNotSucc	INT16	NCAM	0 - 16,384
NBlueSubSAWOblique	INT16	NCAM	0 - 16,384
NBlueSubSAWNadirView	INT16	NCAM	0 - 16,384
NBlueSubSAWMissingBRFs	INT16	NCAM	0 - 16,384
NBlueSubSAWCldyModelFailed	INT16	NCAM	0 - 16,384
NBlueSubSAWTooFewAngAttemptClr	INT16	NCAM	0 - 16,384
NBlueSubSAWTooFewAngMatchClr	INT16	NCAM	0 - 16,384
NBlueSubSAWNotThisAngleMatchClr	INT16	NCAM	0 - 16,384
NBlueSubSAWSceneUnclassifiable	INT16	NCAM	0 - 16,384

NBlueSubSAWNoIglooCamAvail	INT16	NCAM	0 - 16,384
NGreenSubSAWOblique	INT16	NCAM	0 - 16,384
NGreenSubSAWNadirView	INT16	NCAM	0 - 16,384
NGreenSubSAWMissingBRFs	INT16	NCAM	0 - 16,384
NGreenSubSAWCldyModelFailed	INT16	NCAM	0 - 16,384
NGreenSubSAWTooFewAngAttemptClr	INT16	NCAM	0 - 16,384
NGreenSubSAWTooFewAngMatchClr	INT16	NCAM	0 - 16,384
NGreenSubSAWNotThisAngleMatchClr	INT16	NCAM	0 - 16,384
NGreenSubSAWSceneUnclassifiable	INT16	NCAM	0 - 16,384
NGreenSubSAWNoIglooCamAvail	INT16	NCAM	0 - 16,384
NRedSubSAWOblique	INT16	NCAM	0 - 16,384
NRedSubSAWNadirView	INT16	NCAM	0 - 16,384
NRedSubSAWMissingBRFs	INT16	NCAM	0 - 16,384
NRedSubSAWCldyModelFailed	INT16	NCAM	0 - 16,384
NRedSubSAWTooFewAngAttemptClr	INT16	NCAM	0 - 16,384
NRedSubSAWTooFewAngMatchClr	INT16	NCAM	0 - 16,384
NRedSubSAWNotThisAngleMatchClr	INT16	NCAM	0 - 16,384
NRedSubSAWSceneUnclassifiable	INT16	NCAM	0 - 16,384
NRedSubSAWNoIglooCamAvail	INT16	NCAM	0 - 16,384
NNIRSubSAWOblique	INT16	NCAM	0 - 16,384
NNIRSubSAWNadirView	INT16	NCAM	0 - 16,384
NNIRSubSAWMissingBRFs	INT16	NCAM	0 - 16,384
NNIRSubSAWCldyModelFailed	INT16	NCAM	0 - 16,384
NNIRSubSAWTooFewAngAttemptClr	INT16	NCAM	0 - 16,384
NNIRSubSAWTooFewAngMatchClr	INT16	NCAM	0 - 16,384
NNIRSubSAWNotThisAngleMatchClr	INT16	NCAM	0 - 16,384
NNIRSubSAWSceneUnclassifiable	INT16	NCAM	0 - 16,384
NNIRSubSAWNoIglooCamAvail	INT16	NCAM	0 - 16,384
MeanSolarZenAngleCos	FLOAT32	--	0.0 - 1.0
BlockQaGlobalHist: Block-level Histograms			
LoBndLocAlbBlue	FLOAT32	--	
HiBndLocAlbBlue	FLOAT32	--	
NBinsLocAlbBlue	INT16	--	0 - 22
HistLocAlbBlue	INT16	22	0 - 16,384
LoBndLocAlbBlueNoFill	FLOAT32	--	
HiBndLocAlbBlueNoFill	FLOAT32	--	
NBinsLocAlbBlueNoFill	INT16	--	0 - 22
HistLocAlbBlueNoFill	INT16	22	0 - 16,384
LoBndLocAlbClearBlue	FLOAT32	--	
HiBndLocAlbClearBlue	FLOAT32	--	
NBinsLocAlbClearBlue	INT16	--	0 - 22

HistLocAlbClearBlue	INT16	22	0 - 16,384
LoBndLocAlbClearBlueNoFill	FLOAT32	--	
HiBndLocAlbClearBlueNoFill	FLOAT32	--	
NBinsLocAlbClearBlueNoFill	INT16	--	0 - 22
HistLocAlbClearBlueNoFill	INT16	22	0 - 16,384
LoBndLocAlbCloudBlue	FLOAT32	--	
HiBndLocAlbCloudBlue	FLOAT32	--	
NBinsLocAlbCloudBlue	INT16	--	0 - 22
HistLocAlbCloudBlue	INT16	22	0 - 16,384
LoBndLocAlbCloudBlueNoFill	FLOAT32	--	
HiBndLocAlbCloudBlueNoFill	FLOAT32	--	
NBinsLocAlbCloudBlueNoFill	INT16	--	0 - 22
HistLocAlbCloudBlueNoFill	INT16	22	0 - 16,384
LoBndResAlbBlue	FLOAT32	--	
HiBndResAlbBlue	FLOAT32	--	
NBinsResAlbBlue	INT16	--	0 - 22
HistResAlbBlue	INT16	22	0 - 16,384
LoBndResAlbBlueNoFill	FLOAT32	--	
HiBndResAlbBlueNoFill	FLOAT32	--	
NBinsResAlbBlueNoFill	INT16	--	0 - 22
HistResAlbBlueNoFill	INT16	22	0 - 16,384
LoBndExpAlbBlue	FLOAT32	--	
HiBndExpAlbBlue	FLOAT32	--	
NBinsExpAlbBlue	INT16	--	0 - 22
HistExpAlbBlue	INT16	22	0 - 16,384
LoBndLocAlbGreen	FLOAT32	--	
HiBndLocAlbGreen	FLOAT32	--	
NBinsLocAlbGreen	INT16	--	0 - 22
HistLocAlbGreen	INT16	22	0 - 16,384
LoBndLocAlbGreenNoFill	FLOAT32	--	
HiBndLocAlbGreenNoFill	FLOAT32	--	
NBinsLocAlbGreenNoFill	INT16	--	0 - 22
HistLocAlbGreenNoFill	INT16	22	0 - 16,384
LoBndLocAlbClearGreen	FLOAT32	--	
HiBndLocAlbClearGreen	FLOAT32	--	
NBinsLocAlbClearGreen	INT16	--	0 - 22
HistLocAlbClearGreen	INT16	22	0 - 16,384
LoBndLocAlbClearGreenNoFill	FLOAT32	--	
HiBndLocAlbClearGreenNoFill	FLOAT32	--	
NBinsLocAlbClearGreenNoFill	INT16	--	0 - 22
HistLocAlbClearGreenNoFill	INT16	22	0 - 16,384

LoBndLocAlbCloudGreen	FLOAT32	--	
HiBndLocAlbCloudGreen	FLOAT32	--	
NBinsLocAlbCloudGreen	INT16	--	0 - 22
HistLocAlbCloudGreen	INT16	22	0 - 16,384
LoBndLocAlbCloudGreenNoFill	FLOAT32	--	
HiBndLocAlbCloudGreenNoFill	FLOAT32	--	
NBinsLocAlbCloudGreenNoFill	INT16	--	0 - 22
HistLocAlbCloudGreenNoFill	INT16	22	0 - 16,384
LoBndResAlbGreen	FLOAT32	--	
HiBndResAlbGreen	FLOAT32	--	
NBinsResAlbGreen	INT16	--	0 - 22
HistResAlbGreen	INT16	22	0 - 16,384
LoBndResAlbGreenNoFill	FLOAT32	--	
HiBndResAlbGreenNoFill	FLOAT32	--	
NBinsResAlbGreenNoFill	INT16	--	0 - 22
HistResAlbGreenNoFill	INT16	22	0 - 16,384
LoBndExpAlbGreen	FLOAT32	--	
HiBndExpAlbGreen	FLOAT32	--	
NBinsExpAlbGreen	INT16	--	0 - 22
HistExpAlbGreen	INT16	22	0 - 16,384
LoBndLocAlbRed	FLOAT32	--	
HiBndLocAlbRed	FLOAT32	--	
NBinsLocAlbRed	INT16	--	0 - 22
HistLocAlbRed	INT16	22	0 - 16,384
LoBndLocAlbRedNoFill	FLOAT32	--	
HiBndLocAlbRedNoFill	FLOAT32	--	
NBinsLocAlbRedNoFill	INT16	--	0 - 22
HistLocAlbRedNoFill	INT16	22	0 - 16,384
LoBndLocAlbClearRed	FLOAT32	--	
HiBndLocAlbClearRed	FLOAT32	--	
NBinsLocAlbClearRed	INT16	--	0 - 22
HistLocAlbClearRed	INT16	22	0 - 16,384
LoBndLocAlbClearRedNoFill	FLOAT32	--	
HiBndLocAlbClearRedNoFill	FLOAT32	--	
NBinsLocAlbClearRedNoFill	INT16	--	0 - 22
HistLocAlbClearRedNoFill	INT16	22	0 - 16,384
LoBndLocAlbCloudRed	FLOAT32	--	
HiBndLocAlbCloudRed	FLOAT32	--	
NBinsLocAlbCloudRed	INT16	--	0 - 22
HistLocAlbCloudRed	INT16	22	0 - 16,384
LoBndLocAlbCloudRedNoFill	FLOAT32	--	

HiBndLocAlbCloudRedNoFill	FLOAT32	--	
NBinsLocAlbCloudRedNoFill	INT16	--	0 - 22
HistLocAlbCloudRedNoFill	INT16	22	0 - 16,384
LoBndResAlbRed	FLOAT32	--	
HiBndResAlbRed	FLOAT32	--	
NBinsResAlbRed	INT16	--	0 - 22
HistResAlbRed	INT16	22	0 - 16,384
LoBndResAlbRedNoFill	FLOAT32	--	
HiBndResAlbRedNoFill	FLOAT32	--	
NBinsResAlbRedNoFill	INT16	--	0 - 22
HistResAlbRedNoFill	INT16	22	0 - 16,384
LoBndExpAlbRed	FLOAT32	--	
HiBndExpAlbRed	FLOAT32	--	
NBinsExpAlbRed	INT16	--	0 - 22
HistExpAlbRed	INT16	22	0 - 16,384
LoBndLocAlbNIR	FLOAT32	--	
HiBndLocAlbNIR	FLOAT32	--	
NBinsLocAlbNIR	INT16	--	0 - 22
HistLocAlbNIR	INT16	22	0 - 16,384
LoBndLocAlbNIRNoFill	FLOAT32	--	
HiBndLocAlbNIRNoFill	FLOAT32	--	
NBinsLocAlbNIRNoFill	INT16	--	0 - 22
HistLocAlbNIRNoFill	INT16	22	0 - 16,384
LoBndLocAlbClearNIR	FLOAT32	--	
HiBndLocAlbClearNIR	FLOAT32	--	
NBinsLocAlbClearNIR	INT16	--	0 - 22
HistLocAlbClearNIR	INT16	22	0 - 16,384
LoBndLocAlbClearNIRNoFill	FLOAT32	--	
HiBndLocAlbClearNIRNoFill	FLOAT32	--	
NBinsLocAlbClearNIRNoFill	INT16	--	0 - 22
HistLocAlbClearNIRNoFill	INT16	22	0 - 16,384
LoBndLocAlbCloudNIR	FLOAT32	--	
HiBndLocAlbCloudNIR	FLOAT32	--	
NBinsLocAlbCloudNIR	INT16	--	0 - 22
HistLocAlbCloudNIR	INT16	22	0 - 16,384
LoBndLocAlbCloudNIRNoFill	FLOAT32	--	
HiBndLocAlbCloudNIRNoFill	FLOAT32	--	
NBinsLocAlbCloudNIRNoFill	INT16	--	0 - 22
HistLocAlbCloudNIRNoFill	INT16	22	0 - 16,384
LoBndResAlbNIR	FLOAT32	--	
HiBndResAlbNIR	FLOAT32	--	

NBinsResAlbNIR	INT16	--	0 - 22
HistResAlbNIR	INT16	22	0 - 16,384
LoBndResAlbNIRNoFill	FLOAT32	--	
HiBndResAlbNIRNoFill	FLOAT32	--	
NBinsResAlbNIRNoFill	INT16	--	0 - 22
HistResAlbNIRNoFill	INT16	22	0 - 16,384
LoBndExpAlbNIR	FLOAT32	--	
HiBndExpAlbNIR	FLOAT32	--	
NBinsExpAlbNIR	INT16	--	0 - 22
HistExpAlbNIR	INT16	22	0 - 16,384
BlockQaGlobalHist2: Block-level Histograms			
LoBndResAlbTopBlue	FLOAT32	--	
HiBndResAlbTopBlue	FLOAT32	--	
NBinsResAlbTopBlue	INT16	--	0 - 22
HistResAlbTopBlue	INT16	22	0 - 16,384
LoBndResAlbSideBlueDf	FLOAT32	--	
HiBndResAlbSideBlueDf	FLOAT32	--	
NBinsResAlbSideBlueDf	INT16	--	0 - 22
HistResAlbSideBlueDf	INT16	22	0 - 16,384
LoBndResAlbSideBlueCf	FLOAT32	--	
HiBndResAlbSideBlueCf	FLOAT32	--	
NBinsResAlbSideBlueCf	INT16	--	0 - 22
HistResAlbSideBlueCf	INT16	22	0 - 16,384
LoBndResAlbSideBlueBf	FLOAT32	--	
HiBndResAlbSideBlueBf	FLOAT32	--	
NBinsResAlbSideBlueBf	INT16	--	0 - 22
HistResAlbSideBlueBf	INT16	22	0 - 16,384
LoBndResAlbSideBlueAf	FLOAT32	--	
HiBndResAlbSideBlueAf	FLOAT32	--	
NBinsResAlbSideBlueAf	INT16	--	0 - 22
HistResAlbSideBlueAf	INT16	22	0 - 16,384
LoBndResAlbSideBlueAn	FLOAT32	--	
HiBndResAlbSideBlueAn	FLOAT32	--	
NBinsResAlbSideBlueAn	INT16	--	0 - 22
HistResAlbSideBlueAn	INT16	22	0 - 16,384
LoBndResAlbSideBlueAa	FLOAT32	--	
HiBndResAlbSideBlueAa	FLOAT32	--	
NBinsResAlbSideBlueAa	INT16	--	0 - 22
HistResAlbSideBlueAa	INT16	22	0 - 16,384
LoBndResAlbSideBlueBa	FLOAT32	--	
HiBndResAlbSideBlueBa	FLOAT32	--	

NBinsResAlbSideBlueBa	INT16	--	0 - 22
HistResAlbSideBlueBa	INT16	22	0 - 16,384
LoBndResAlbSideBlueCa	FLOAT32	--	
HiBndResAlbSideBlueCa	FLOAT32	--	
NBinsResAlbSideBlueCa	INT16	--	0 - 22
HistResAlbSideBlueCa	INT16	22	0 - 16,384
LoBndResAlbSideBlueDa	FLOAT32	--	
HiBndResAlbSideBlueDa	FLOAT32	--	
NBinsResAlbSideBlueDa	INT16	--	0 - 22
HistResAlbSideBlueDa	INT16	22	0 - 16,384
LoBndResAlbTopGreen	FLOAT32	--	
HiBndResAlbTopGreen	FLOAT32	--	
NBinsResAlbTopGreen	INT16	--	0 - 22
HistResAlbTopGreen	INT16	22	0 - 16,384
LoBndResAlbSideGreenDf	FLOAT32	--	
HiBndResAlbSideGreenDf	FLOAT32	--	
NBinsResAlbSideGreenDf	INT16	--	0 - 22
HistResAlbSideGreenDf	INT16	22	0 - 16,384
LoBndResAlbSideGreenCf	FLOAT32	--	
HiBndResAlbSideGreenCf	FLOAT32	--	
NBinsResAlbSideGreenCf	INT16	--	0 - 22
HistResAlbSideGreenCf	INT16	22	0 - 16,384
LoBndResAlbSideGreenBf	FLOAT32	--	
HiBndResAlbSideGreenBf	FLOAT32	--	
NBinsResAlbSideGreenBf	INT16	--	0 - 22
HistResAlbSideGreenBf	INT16	22	0 - 16,384
LoBndResAlbSideGreenAf	FLOAT32	--	
HiBndResAlbSideGreenAf	FLOAT32	--	
NBinsResAlbSideGreenAf	INT16	--	0 - 22
HistResAlbSideGreenAf	INT16	22	0 - 16,384
LoBndResAlbSideGreenAn	FLOAT32	--	
HiBndResAlbSideGreenAn	FLOAT32	--	
NBinsResAlbSideGreenAn	INT16	--	0 - 22
HistResAlbSideGreenAn	INT16	22	0 - 16,384
LoBndResAlbSideGreenAa	FLOAT32	--	
HiBndResAlbSideGreenAa	FLOAT32	--	
NBinsResAlbSideGreenAa	INT16	--	0 - 22
HistResAlbSideGreenAa	INT16	22	0 - 16,384
LoBndResAlbSideGreenBa	FLOAT32	--	
HiBndResAlbSideGreenBa	FLOAT32	--	
NBinsResAlbSideGreenBa	INT16	--	0 - 22

HistResAlbSideGreenBa	INT16	22	0 - 16,384
LoBndResAlbSideGreenCa	FLOAT32	--	
HiBndResAlbSideGreenCa	FLOAT32	--	
NBinsResAlbSideGreenCa	INT16	--	0 - 22
HistResAlbSideGreenCa	INT16	22	0 - 16,384
LoBndResAlbSideGreenDa	FLOAT32	--	
HiBndResAlbSideGreenDa	FLOAT32	--	
NBinsResAlbSideGreenDa	INT16	--	0 - 22
HistResAlbSideGreenDa	INT16	22	0 - 16,384
LoBndResAlbTopRed	FLOAT32	--	
HiBndResAlbTopRed	FLOAT32	--	
NBinsResAlbTopRed	INT16	--	0 - 22
HistResAlbTopRed	INT16	22	0 - 16,384
LoBndResAlbSideRedDf	FLOAT32	--	
HiBndResAlbSideRedDf	FLOAT32	--	
NBinsResAlbSideRedDf	INT16	--	0 - 22
HistResAlbSideRedDf	INT16	22	0 - 16,384
LoBndResAlbSideRedCf	FLOAT32	--	
HiBndResAlbSideRedCf	FLOAT32	--	
NBinsResAlbSideRedCf	INT16	--	0 - 22
HistResAlbSideRedCf	INT16	22	0 - 16,384
LoBndResAlbSideRedBf	FLOAT32	--	
HiBndResAlbSideRedBf	FLOAT32	--	
NBinsResAlbSideRedBf	INT16	--	0 - 22
HistResAlbSideRedBf	INT16	22	0 - 16,384
LoBndResAlbSideRedAf	FLOAT32	--	
HiBndResAlbSideRedAf	FLOAT32	--	
NBinsResAlbSideRedAf	INT16	--	0 - 22
HistResAlbSideRedAf	INT16	22	0 - 16,384
LoBndResAlbSideRedAn	FLOAT32	--	
HiBndResAlbSideRedAn	FLOAT32	--	
NBinsResAlbSideRedAn	INT16	--	0 - 22
HistResAlbSideRedAn	INT16	22	0 - 16,384
LoBndResAlbSideRedAa	FLOAT32	--	
HiBndResAlbSideRedAa	FLOAT32	--	
NBinsResAlbSideRedAa	INT16	--	0 - 22
HistResAlbSideRedAa	INT16	22	0 - 16,384
LoBndResAlbSideRedBa	FLOAT32	--	
HiBndResAlbSideRedBa	FLOAT32	--	
NBinsResAlbSideRedBa	INT16	--	0 - 22
HistResAlbSideRedBa	INT16	22	0 - 16,384

LoBndResAlbSideRedCa	FLOAT32	--	
HiBndResAlbSideRedCa	FLOAT32	--	
NBinsResAlbSideRedCa	INT16	--	0 - 22
HistResAlbSideRedCa	INT16	22	0 - 16,384
LoBndResAlbSideRedDa	FLOAT32	--	
HiBndResAlbSideRedDa	FLOAT32	--	
NBinsResAlbSideRedDa	INT16	--	0 - 22
HistResAlbSideRedDa	INT16	22	0 - 16,384
LoBndResAlbTopNIR	FLOAT32	--	
HiBndResAlbTopNIR	FLOAT32	--	
NBinsResAlbTopNIR	INT16	--	0 - 22
HistResAlbTopNIR	INT16	22	0 - 16,384
LoBndResAlbSideNIRDf	FLOAT32	--	
HiBndResAlbSideNIRDf	FLOAT32	--	
NBinsResAlbSideNIRDf	INT16	--	0 - 22
HistResAlbSideNIRDf	INT16	22	0 - 16,384
LoBndResAlbSideNIRCf	FLOAT32	--	
HiBndResAlbSideNIRCf	FLOAT32	--	
NBinsResAlbSideNIRCf	INT16	--	0 - 22
HistResAlbSideNIRCf	INT16	22	0 - 16,384
LoBndResAlbSideNIRBf	FLOAT32	--	
HiBndResAlbSideNIRBf	FLOAT32	--	
NBinsResAlbSideNIRBf	INT16	--	0 - 22
HistResAlbSideNIRBf	INT16	22	0 - 16,384
LoBndResAlbSideNIRAf	FLOAT32	--	
HiBndResAlbSideNIRAf	FLOAT32	--	
NBinsResAlbSideNIRAf	INT16	--	0 - 22
HistResAlbSideNIRAf	INT16	22	0 - 16,384
LoBndResAlbSideNIRAn	FLOAT32	--	
HiBndResAlbSideNIRAn	FLOAT32	--	
NBinsResAlbSideNIRAn	INT16	--	0 - 22
HistResAlbSideNIRAn	INT16	22	0 - 16,384
LoBndResAlbSideNIRAa	FLOAT32	--	
HiBndResAlbSideNIRAa	FLOAT32	--	
NBinsResAlbSideNIRAa	INT16	--	0 - 22
HistResAlbSideNIRAa	INT16	22	0 - 16,384
LoBndResAlbSideNIRBa	FLOAT32	--	
HiBndResAlbSideNIRBa	FLOAT32	--	
NBinsResAlbSideNIRBa	INT16	--	0 - 22
HistResAlbSideNIRBa	INT16	22	0 - 16,384
LoBndResAlbSideNIRCa	FLOAT32	--	

HiBndResAlbSideNIRCa	FLOAT32	--	
NBinsResAlbSideNIRCa	INT16	--	0 - 22
HistResAlbSideNIRCa	INT16	22	0 - 16,384
LoBndResAlbSideNIRDa	FLOAT32	--	
HiBndResAlbSideNIRDa	FLOAT32	--	
NBinsResAlbSideNIRDa	INT16	--	0 - 22
HistResAlbSideNIRDa	INT16	22	0 - 16,384
LoBndResAlbSideCamsBlue	FLOAT32	--	
HiBndResAlbSideCamsBlue	FLOAT32	--	
NBinsResAlbSideCamsBlue	INT16	--	0 - 22
HistResAlbSideCamsBlue	INT16	22	0 - 16,384
LoBndResAlbSideCamsGreen	FLOAT32	--	
HiBndResAlbSideCamsGreen	FLOAT32	--	
NBinsResAlbSideCamsGreen	INT16	--	0 - 22
HistResAlbSideCamsGreen	INT16	22	0 - 16,384
LoBndResAlbSideCamsRed	FLOAT32	--	
HiBndResAlbSideCamsRed	FLOAT32	--	
NBinsResAlbSideCamsRed	INT16	--	0 - 22
HistResAlbSideCamsRed	INT16	22	0 - 16,384
LoBndResAlbSideCamsNIR	FLOAT32	--	
HiBndResAlbSideCamsNIR	FLOAT32	--	
NBinsResAlbSideCamsNIR	INT16	--	0 - 22
HistResAlbSideCamsNIR	INT16	22	0 - 16,384
BlockQaGlobalHist3: Block-level Histograms			
LoBndRlraKm	FLOAT32	--	
HiBndRlraKm	FLOAT32	--	
NbinsRlraKm	INT16	--	0 - 22
HistRlraKm	INT16	22	0 - 16,384
LoBndRlraKmNoFill	FLOAT32	--	
HiBndRlraKmNoFill	FLOAT32	--	
NbinsRlraKmNoFill	INT16	--	0 - 22
HistRlraKmNoFill	INT16	22	0 - 16,384
LoBndLiqCloudPhaseProb	FLOAT32	--	
HiBndLiqCloudPhaseProb	FLOAT32	--	
NBinsLiqCloudPhaseProb	INT16	--	0 - 22
HistLiqCloudPhaseProb	INT16	22	0 - 16,384
LoBndSunZenithIndex	FLOAT32	--	
HiBndSunZenithIndex	FLOAT32	--	
NBinsSunZenithIndex	INT16	--	0 - 22
HistSunZenithIndex	INT16	22	0 - 16,384
LoBndRelAzimuthAngleDf	FLOAT32	--	

HiBndRelAzimuthAngleDf	FLOAT32	--	
NBinsRelAzimuthAngleDf	INT16	--	0 - 22
HistRelAzimuthAngleDf	INT16	22	0 - 16,384
LoBndRelAzimuthAngleCf	FLOAT32	--	
HiBndRelAzimuthAngleCf	FLOAT32	--	
NBinsRelAzimuthAngleCf	INT16	--	0 - 22
HistRelAzimuthAngleCf	INT16	22	0 - 16,384
LoBndRelAzimuthAngleBf	FLOAT32	--	
HiBndRelAzimuthAngleBf	FLOAT32	--	
NBinsRelAzimuthAngleBf	INT16	--	0 - 22
HistRelAzimuthAngleBf	INT16	22	0 - 16,384
LoBndRelAzimuthAngleAf	FLOAT32	--	
HiBndRelAzimuthAngleAf	FLOAT32	--	
NBinsRelAzimuthAngleAf	INT16	--	0 - 22
HistRelAzimuthAngleAf	INT16	22	0 - 16,384
LoBndRelAzimuthAngleAn	FLOAT32	--	
HiBndRelAzimuthAngleAn	FLOAT32	--	
NBinsRelAzimuthAngleAn	INT16	--	0 - 22
HistRelAzimuthAngleAn	INT16	22	0 - 16,384
LoBndRelAzimuthAngleAa	FLOAT32	--	
HiBndRelAzimuthAngleAa	FLOAT32	--	
NBinsRelAzimuthAngleAa	INT16	--	0 - 22
HistRelAzimuthAngleAa	INT16	22	0 - 16,384
LoBndRelAzimuthAngleBa	FLOAT32	--	
HiBndRelAzimuthAngleBa	FLOAT32	--	
NBinsRelAzimuthAngleBa	INT16	--	0 - 22
HistRelAzimuthAngleBa	INT16	22	0 - 16,384
LoBndRelAzimuthAngleCa	FLOAT32	--	
HiBndRelAzimuthAngleCa	FLOAT32	--	
NBinsRelAzimuthAngleCa	INT16	--	0 - 22
HistRelAzimuthAngleCa	INT16	22	0 - 16,384
LoBndRelAzimuthAngleDa	FLOAT32	--	
HiBndRelAzimuthAngleDa	FLOAT32	--	
NBinsRelAzimuthAngleDa	INT16	--	0 - 22
HistRelAzimuthAngleDa	INT16	22	0 - 16,384
LoBndBrightnessIndexDf	FLOAT32	--	
HiBndBrightnessIndexDf	FLOAT32	--	
NBinsBrightnessIndexDf	INT16	--	0 - 22
HistBrightnessIndexDf	INT16	22	0 - 16,384
LoBndBrightnessIndexCf	FLOAT32	--	
HiBndBrightnessIndexCf	FLOAT32	--	

NBinsBrightnessIndexCf	INT16	--	0 - 22
HistBrightnessIndexCf	INT16	22	0 - 16,384
LoBndBrightnessIndexBf	FLOAT32	--	
HiBndBrightnessIndexBf	FLOAT32	--	
NBinsBrightnessIndexBf	INT16	--	0 - 22
HistBrightnessIndexBf	INT16	22	0 - 16,384
LoBndBrightnessIndexAf	FLOAT32	--	
HiBndBrightnessIndexAf	FLOAT32	--	
NBinsBrightnessIndexAf	INT16	--	0 - 22
HistBrightnessIndexAf	INT16	22	0 - 16,384
LoBndBrightnessIndexAn	FLOAT32	--	
HiBndBrightnessIndexAn	FLOAT32	--	
NBinsBrightnessIndexAn	INT16	--	0 - 22
HistBrightnessIndexAn	INT16	22	0 - 16,384
LoBndBrightnessIndexAa	FLOAT32	--	
HiBndBrightnessIndexAa	FLOAT32	--	
NBinsBrightnessIndexAa	INT16	--	0 - 22
HistBrightnessIndexAa	INT16	22	0 - 16,384
LoBndBrightnessIndexBa	FLOAT32	--	
HiBndBrightnessIndexBa	FLOAT32	--	
NBinsBrightnessIndexBa	INT16	--	0 - 22
HistBrightnessIndexBa	INT16	22	0 - 16,384
LoBndBrightnessIndexCa	FLOAT32	--	
HiBndBrightnessIndexCa	FLOAT32	--	
NBinsBrightnessIndexCa	INT16	--	0 - 22
HistBrightnessIndexCa	INT16	22	0 - 16,384
LoBndBrightnessIndexDa	FLOAT32	--	
HiBndBrightnessIndexDa	FLOAT32	--	
NBinsBrightnessIndexDa	INT16	--	0 - 22
HistBrightnessIndexDa	INT16	22	0 - 16,384
LoBndClearSkyCamsBlue	FLOAT32	--	
HiBndClearSkyCamsBlue	FLOAT32	--	
NBinsClearSkyCamsBlue	INT16	--	0 - 22
HistClearSkyCamsBlue	INT16	22	0 - 16,384
LoBndClearSkyCamsGreen	FLOAT32	--	
HiBndClearSkyCamsGreen	FLOAT32	--	
NBinsClearSkyCamsGreen	INT16	--	0 - 22
HistClearSkyCamsGreen	INT16	22	0 - 16,384
LoBndClearSkyCamsRed	FLOAT32	--	
HiBndClearSkyCamsRed	FLOAT32	--	
NBinsClearSkyCamsRed	INT16	--	0 - 22

HistClearSkyCamsRed	INT16	22	0 - 16,384
LoBndClearSkyCamsNIR	FLOAT32	--	
HiBndClearSkyCamsNIR	FLOAT32	--	
NBinsClearSkyCamsNIR	INT16	--	0 - 22
HistClearSkyCamsNIR	INT16	22	0 - 16,384

8 MISR LEVEL 2 AEROSOL/SURFACE PRODUCT

8.1 MISR LEVEL 2 A/S PRODUCT GRANULE NAMES

MISR Level 2 Aerosol/Surface Products are composed of the three granules listed below (Table 8-1).

Table 8-1: MISR Level 2 Aerosol/Surface File Granule Names

MISR LEVEL 2 A/S FILE GRANULE NAME	ESDT Name	Section
MISR_AM1_AS_AEROSOL_Pnnn_Onnnnnn_Fnn_nnnn.hdf	MIL2ASAE	8.4
MISR_AM1_AS_AEROSOL_FIRSTLOOK_Pnnn_Onnnnnn_Fnn_nnnn.hdf	MIL2ASAF	
MISR_AM1_AS_LAND_Pnnn_Onnnnnn_Fnn_nnnn.hdf	MIL2ASLS	8.5
MISR_AM1_AS_LAND_FIRSTLOOK_Pnnn_Onnnnnn_Fnn_nnnn.hdf	MIL2ASLF	
MISR_AM1_AS_OCEAN_Pnnn_Onnnnnn_Fnn_nnnn.hdf	MIL2ASOS	8.6
MISR_AM1_AS_OCEAN_FIRSTLOOK_Pnnn_Onnnnnn_Fnn_nnnn.hdf	MIL2ASOF	

8.2 MISR LEVEL 2 A/S PRODUCT GRANULE BRIEF DESCRIPTIONS

The Aerosol/Surface Subsystem Software provides for the end-to-end generation of the MISR Level 2 Aerosol/Surface Product. The product generation occurs in several stages.

Initially, the Level 1B2 high-resolution data samples are averaged to the resolutions required by the Aerosol and Surface retrieval algorithms. The averaged radiances are then normalized to an Earth-Sun distance of 1 AU, converted to equivalent reflectances, corrected for out-of-band radiance, and corrected for ozone absorption. The 1.1 km x 1.1 km subregions are then screened for contamination from sources such as clouds, cloud shadows, sun glitter over water, topographically complex terrain, and topographically shadowed regions.

Next, these corrected equivalent reflectances from selected subregions contained within the 17.6 x 17.6 km region are compared to model equivalent reflectances obtained from the SMART (Simulated MISR Ancillary Radiative Transfer) dataset to obtain the best estimate of the atmospheric aerosol properties. The model equivalent reflectances correspond to various aerosol types and amounts, sun and view geometries, surface types and meteorological conditions. A subset of appropriate SMART models is chosen based upon ambient meteorological conditions, sun and view angles, and surface type. Constraints on optical depth are also computed from the minimum corrected equivalent reflectances within a region. Over dark water regions, a set of 4 χ^2 minimization tests are performed, comparing model equivalent reflectances, calculated assuming an ocean surface boundary, and the MISR regional equivalent reflectances. The aerosol models which result in the lowest residuals indicate the column aerosol parameters that best characterize the region. Over heterogeneous land regions, the minimization is performed in a slightly different manner, due to the variability of the surface reflectance. First, view angle-dependent empirical orthogonal functions

(EOFs), computed from the corrected MISR subregional equivalent reflectances, are used in an expansion of the surface-reflected component of the equivalent reflectances at the top of the atmosphere. This expansion term plus the model atmospheric path equivalent reflectances (i.e., TOA equivalent reflectances for a black surface) are then compared to the MISR regional TOA equivalent reflectances. The model which results in the lowest residuals (based on a least squares determination of the EOF coefficients in the expansion term) indicates the column aerosol parameters that best characterize the region.

A subregional surface retrieval is conducted on regions for which valid land aerosol retrievals exist. The retrieval is performed using the corrected equivalent reflectances, retrieved aerosol parameters, and auxiliary information from the SMART dataset. The spectral and PAR-integrated bihemispherical reflectance (BHR) and directional hemispherical reflectance (DHR) are retrieved, along with the spectral hemispherical-directional reflectance factors (HDRF) and bidirectional reflectances factors (BRF) and BRF model parameters, for all valid land and inland water subregions. Subregional surface classification and leaf area index (LAI) and subregional FPAR (fraction of photosynthetically-active radiation) are also determined. Subregional variability is also calculated for land regions. For tropical ocean regions near the equator with valid aerosol retrievals, the water-leaving equivalent reflectance at the B-camera viewing angle is also retrieved, after correcting the MISR equivalent reflectances for sun glitter and whitecaps. Two different methods of atmospheric correction are used, and both results are used to determine a corresponding phytoplankton pigment concentration.

Table 8-2: Surface-Atmosphere Radiation Interaction Terms[1]

Term	Name	Definition	Units
BRDF	Bidirectional Reflectance Distribution Function	surface-leaving radiance divided by incident irradiance from a single direction	$ster^{-1}$
BRF	Bidirectional Reflectance Factor	surface-leaving radiance divided by radiance from a Lambert reflector illuminated from a single direction	n/a
HDRF	Hemispherical-Directional Reflectance Factor	surface-leaving radiance divided by radiance from a Lambert reflector with same illumination	n/a
DHR	Directional-Hemispherical Reflectance	radiant exitance divided by irradiance under illumination from a single direction	n/a
BHR	Bi-Hemispherical Reflectance	radiant exitance divided by irradiance under same illumination conditions	n/a
L	Radiance	radiant energy per time-area-solid angle	W/m^2-ster
E	Irradiance	radiant energy flux	W/m^2
M	Radiant Exitance	radiant energy flux leaving a surface	W/m^2

8.3 MISR LEVEL 2 A/S PRODUCT GRANULE DATA SETS

The product will be produced as 3 separate ESDTs. The Aerosol, Land Surface, and Ocean Surface

1 Note: Quantities in this table are computed for the conditions prevailing at the time and place of the measurement. For example, there is crosstrack and alongtrack varation in the solar zenith and azimuth angles used to determine BRF. The angles used depend upon the precise time that the region was viewed by MISR.

files each are stored as one physical file, as shown in Table 8-3. Each physical file is in the HDF-EOS Grid "stacked-block" format and each contains two or three HDF-EOS Grid datasets, corresponding to parameters at 1.1 km spatial resolution, at 17.6 km spatial resolution, and at 70.4 km spatial resolution. The grid datasets will have the usual x and y dimensions, as well as a third dimension corresponding to the SOM block number. The x and y dimensions will correspond to the the number of 1.1 km^2 subregions, 17.6 km^2 regions, or 70.4 km^2 domains in the along-track and cross-track directions. For the files containing aerosol parameters and land surface parameters, the number of blocks in the grid dataset will correspond exactly to the number and location of blocks in the Level 1B2 and Level 2 TOA/Cloud Product files for the same orbit. Also, the blocks that make up the Aerosol/Surface Product files are a direct subset of the blocks that make up the Ancillary Geographic Product. For the ocean surface parameters, there will only be 6 blocks present, because the parameters are only reported along a 600 km belt around the equator.

8.4 DIFFERENCES BETWEEN FIRSTLOOK AND FINAL PROCESSING

The MISR processing stream has now been split up into two parts, "FIRSTLOOK" and "FINAL", to adjust for the new time dependence of the TASC and RCCT ancillary datasets. Both the TASC (Atmospheric and Surface Climatology) and RCCT (Radiometric Camera-by-Camera CloudMask Thresholds) datasets now contain data that is unique to the time period for which the datasets are constructed. The TASC dataset now contains snow-ice and ocean surface wind speed values that are updated on a monthly basis, and the RCCM Thresholds are now derived from the observations for a given 3-month period. Therefore, these datasets cannot be generated until the end of the month or season. Rather than delaying all MISR processing of Level 2 and Level 3 until these datasets are available, the Level 2 and Level 3 data are now produced twice over. These two different runs are given the names "FIRSTLOOK" and "FINAL". The FIRSTLOOK processing uses the TASC from the same month/previous year and the RCCT from the same season in the previous year. When the updated datasets are available, the FINAL processing which uses the correct RCCT and TASC data is run. The FIRSTLOOK products are distinguished by the presence of the "FIRSTLOOK" in the filenames, the FINAL products use the original filenames.

Table 8-3: Level 2 Aerosol/Surface Product Files and Grid Datasets.

ESDT Shortname	Local Granule ID[6]	Grid Dataset Name
MIL2ASAE	MISR_AM1_AS_AEROSOL_P*nnn*_O*nnnnnn*_F*nn*_*nnnn*.hdf	SubregParamsAer
MIL2ASAF	MISR_AM1_AS_AEROSOL_FIRSTLOOK_P*nnn*_O*nnnnnn*_F*nn*_*nnnn*.hdf	RegParamsAer RegParamsPerMixture RegParamsAlgDiagnostics RegParamsEqRefl RegParamsGeometry RegParamsEnvironmental DomParamsAer

6 P*nnn* corresponds to the orbit path, O*nnnnnn* corresponds to the absolute orbit number, F*nn* is the file format version number, and *nnnn* is the file content version number.

MIL2ASLS MIL2ASLF	MISR_AM1_AS_LAND_P*nnn*_O*nnnnnn*_F*nn_nnnn*.hdf MISR_AM1_AS_LAND_FIRSTLOOK_P*nnn*_O*nnnnnn*_F*nn_nnnn*.hdf	SubregParamsLnd RegParamsLnd
MIL2ASOS MIL2ASOF	MISR_AM1_AS_OCEAN_P*nnn*_O*nnnnnn*_F*nn_nnnn*.hdf MISR_AM1_AS_OCEAN_FIRSTLOOK_P*nnn*_O*nnnnnn*_F*nn_nnnn*.hdf	SubregParamsOcn RegParamsOcn

8.5 MISR LEVEL 2 MIL2ASAE AEROSOL PRODUCT

8.5.1 File Metadata Description

Table 8-4: File Metadata for Aerosol Product Files

File Metadata Field Name	Definition	Data Type	Units	Valid Range
Path_number	Orbit path number	INT32	N/A	1-233
AGP_version_id	Version identifier for AGP	INT32	N/A	2
DID_version_id	Version identifier for DID (DTED [Digital Terrain Elevation Dataset] Intermediate Dataset)	INT32	N/A	4
Number_blocks	Total number of blocks	INT32	N/A	1-180
Ocean_blocks_size	Ocean_blocks.number dimension	INT32	N/A	1-180
Ocean_blocks.count	Total number of blocks containing entirely ocean radiances	INT32	N/A	1-180
Ocean_blocks.numbers	List of block numbers containing entirely ocean radiances	INT32	N/A	1-180
SOM_parameters.som_ellipsoid.a	Semimajor axis of ellipsoid (m)	FLOAT64	meters	WGS84 ellipsoid (6.3781370E+06)
SOM_parameters.som_ellipsoid.e2	Eccentricity of ellipsoid squared	FLOAT64	N/A	WGS84 ellipsoid (6.6943480E-03)
SOM_parameters.som_orbit.aprime	Semimajor axis of orbit	FLOAT64	meters	Not used.
SOM_parameters.som_orbit.eprime	Eccentricity of orbit	FLOAT64	N/A	Not used.
SOM_parameters.som_orbit.gama	Longitude of perigee	FLOAT64	radians	Not used.
SOM_parameters.som_orbit.nrev	Number of revolutions per ground track repeat cycle	INT32	N/A	233
SOM_parameters.som_orbit.ro	Radius of circular orbit (m)	FLOAT64	meters	7.0780408E+06
SOM_parameters.som_orbit.i	Inclination of orbit (radians)	FLOAT64	radians	1.7157253
SOM_parameters.som_	Ratio of time of revolution over length of Earth	FLOAT64	N/A	6.8666667E-02

orbit.P2P1	rotation/orbit			
SOM_parameters.som_orbit.lambda0	Geodetic longitude of ascending node at time 0 (radians)	FLOAT64	radians	-2π to 2π
Origin_block.ulc.x	SOM X coordinate (in meters) of the upper left corner of the first block	FLOAT64	meters	6 million to 33 million
Origin_block.ulc.y	SOM Y coordinate (in meters) of the upper left corner of the first block	FLOAT64	meters	+/- 12 million
Origin_block.lrc.x	SOM X coordinate (in meters) of the lower right corner of the first block	FLOAT64	meters	6 million to 33 million
Origin_block.lrc.y	SOM Y coordinate (in meters) of the lower right corner of the first block	FLOAT64	meters	+/- 12 million
Start_block	The block number in the AGP which corresponds to the first block in this file containing data.	INT32	N/A	1 - 180 Start_block < End block
End block	The block number in the AGP which corresponds to the last block in this file containing data.	INT32	N/A	1 - 180 Start_block < End block
Cam_mode	Indicates whether the data in this grid file was obtained in MISR global mode or local mode.	INT32	N/A	0-1 1 = global 0 = local
Num_local_modes	The number of MISR local mode acquisitions contained in this file.	INT32	N/A	0-6 0 if data is global mode
Local_mode_site_name	The geographical name of the first local mode site contained in this file.	CHAR8	N/A	string up to 12 characters in length, including null
Orbit_QA	Indication of the overall quality of the orbit data based on analysis of quality flags in the spacecraft attitude and ephemeris data. Geolocation accuracy may be impaired for orbits with poor quality orbit data.	FLOAT32	N/A	-9999.0 = NoRetrieval, -1.0 = Poor, 0.0 = Nominal

8.5.2 Vdata Description

HDF vdatas are used in the aerosol product as “flag legends,” which map flag values to their definitions. Flag legend vdatas consist of two fields called "Value" and "Description." The "Value" field is of type UINT8, and consists of one element. The "Description" field is of type CHAR8, and consists of 80 elements. There is one record per flag value. The flag legends are summarized below. To obtain the actual values of the flag values and descriptions, read the vdatas in the file, or refer to Tables 8-9 through 8-14 in this document.

Table 8-5: Aerosol Product File Vdata Summary

Vdata Name	Number of Records	Fields	Number of Values	Data Type
Data Table	21	Aerosol model name	1	CHAR8

		Model number	1	INT32
		Input model number	1	INT32
		Shape	1	CHAR8
		Size distribution	1	CHAR8
		Minimum radius	1	FLOAT32
		Maximum radius	1	FLOAT32
		Log normal characteristic radius	1	FLOAT32
		Log normal characteristic width	1	FLOAT32
		Power law exponent	1	FLOAT32
		Arithmetic mean radius	1	FLOAT32
		Weighted mean particle cross section	1	FLOAT32
		Weighted mean particle volume	1	FLOAT32
		Effective particle radius	1	FLOAT32
		Effective size variance	1	FLOAT32
		Volume weighted mean radius	1	FLOAT32
		Particle fractional number per classification	5	FLOAT32
		Layer base height	1	FLOAT32
		Layer top height	1	FLOAT32
		Layer scale height	1	FLOAT32
		Spectral refractive index real	4	FLOAT32
		Spectral refractive index imaginary	4	FLOAT32
		Spectral scattering cross section	4	FLOAT32
		Spectral extinction cross section	4	FLOAT32
		Spectral single scattering albedo	4	FLOAT32
		Spectral anisotropy parameter	4	FLOAT32
Bands	4	Band number	1	INT32
		Std_inband_solar_wgted_center_wav	1	FLOAT32

Particle Classification Indices	1	Small (<0.35 micron radius) index	1	INT32
		Medium (0.35 – 0.7 micron radius) index	1	INT32
		Large (>0.7 micron radius) index	1	INT32
		Spherical index	1	INT32
		Non-spherical index	1	INT32
Scattering Angles	205	Scattering angle	1	FLOAT32
Mixture Data	74	Aerosol mixture number	1	INT32
		Mixture type	1	CHAR8
		Component model number	3	INT32
		Component fractional optical depth in reference band	3	FLOAT32
		Normalized mixture spectral optical depth	4	FLOAT32
		Mixture spectral single scattering albedo	5	FLOAT32
		Mixture fractional number per classification	5	FLOAT32
		Mixture fractional volume per classification	5	FLOAT32
		Retrieval path applicability flag	3	INT32
		Angstrom exponent	1	FLOAT32
Component Model Legend	21 (Only 8 of these are used)	Component model number	1	INT32
		Component model name	1	CHAR8
Bands	4	Band number	1	INT32
		Std_inband_solar_wgted_center_wav	1	FLOAT32
Mixture Classification Indices	1	Small (< 0.35 micron radius) index	1	INT32
		Medium (0.35 – 0.7 micron radius) index	1	INT32
		Large (>0.7 micron radius)	1	INT32
		Spherical index	1	INT32
		Non-spherical index	1	INT32
Retrieval Path Indices	1	Dark water index	1	INT32
		Optically thick atmosphere index	1	INT32
		Heterogeneous land index	1	INT32

Retrieval Path Applicability Flag Legend	2	Retrieval path applicability flag value	1	INT32
		Meaing of flag value	1	CHAR8
RetrAppMask Flag Legend	14	Value	1	UINT8
		Description	1	CHAR8
SubrUsed Flag Legend	3	Value	1	UINT8
		Description	1	CHAR8
OptDepthUpBdCam Flag Legend	9	Value	1	UINT8
		Description	1	CHAR8
OptDepthUpBdBand Flag Legend	4	Value	1	UINT8
		Description	1	CHAR8
AlgTypeFlag Flag Legend	10	Value	1	UINT8
		Description	1	CHAR8
RegClassInd Flag Legend	5	Value	1	UINT8
		Description	1	CHAR8
RegSurfTypeFlag Flag Legend	6	Value	1	UINT8
		Description	1	CHAR8
CamRainbow Flag Legend	2	Value	1	UINT8
		Description	1	CHAR8
AerRetrSuccFlag Flag Legend	8	Value	1	UINT8
		Description	1	CHAR8
ColOzAbundSrc Flag Legend	4	Value	1	UINT8
		Description	1	CHAR8
SfcWindspSrc Flag Legend	4	Value	1	UINT8
		Description	1	CHAR8
SfcPresSrc Flag Legend	4	Value	1	UINT8
		Description	1	CHAR8
RegAltPresSrc Flag Legend	4	Value	1	UINT8
		Description	1	CHAR8
SfcAirTempSrc Flag Legend	4	Value	1	UINT8
		Description	1	CHAR8
RegAltAirTempSrc Flag Legend	4	Value	1	UINT8
		Description	1	CHAR8
ColPrecipWaterSrc Flag Legend	6	Value	1	UINT8
		Description	1	CHAR8
NParticleTypeDim	5	Value	1	UINT8
		Description	1	CHAR8
NSSABinDim	6	Value	1	UINT8
		Description	1	CHAR8

RegBestEstimateQA Flag Legend	4	Value	1	UINT8
		Description	1	CHAR8
RegParticlePropertyQAFlagLegend	2	Value	1	UINT8
		Description	1	CHAR8

8.5.3 Per-grid Metadata Description

Table 8-6: Per-grid Metadata for Aerosol Product Files

Common Grid Metadata	Definition	Data Type	Valid Values
Block_size.resolution_x	Resolution of block x dimension in meters	INT32	1100, 17600, 70400
Block_size.resolution_y	Resolution of block y dimension in meters	INT32	1100, 17600, 70400
Block_size.size_x	Block x dimension	INT32	128, 8, 2
Block_size.size_y	Block y dimension	INT32	512, 32, 8

Aerosol Grid Metadata	Definition	Data Type	Valid Values
SubregParamsAer			
Min_WaterLeavEqReflExp	Minimum value for field	FLOAT32	Read from grid metadata in file.
Max_WaterLeavEqReflExp	Maximum value for field	FLOAT32	Read from grid metadata in file.
Scale_WaterLeavEqReflExp	Scale factor to apply	FLOAT32	Read from grid metadata in file.
Offset_WaterLeavEqReflExp	Offset factor to apply	FLOAT32	Read from grid metadata in file.
Fill_WaterLeavEqReflExp	Fill value for field	UINT8	Read from grid metadata in file.
Underflow_WaterLeavEqReflExp	Underflow flag value	UINT8	Read from grid metadata in file.
Overflow_WaterLeavEqReflExp	Overflow flag value	UINT8	Read from grid metadata in file.

8.5.4 Per-block Metadata Description

Table 8-7: Per-block Metadata for Aerosol Product Files

PerBlockMetadataCommon	Definition	Data Type	Valid Values
Block_number	Current block number	INT32	1-180
Ocean_flag	Flag signalling whether the block contains entirely ocean radiances	INT8	0 = block has no ocean or is a mix of ocean and land 1 = block is entirely ocean

Block_coor_ulc_som_meter.x	Upper left corner SOM block x coordinate in meters	FLOAT64	
Block_coor_ulc_som_meter.y	Upper left corner SOM block y coordinate in meters	FLOAT64	
Block_coor_lrc_som_meter.x	Lower right corner SOM block x coordinate in meters	FLOAT64	
Block_coor_lrc_som_meter.y	Lower right corner SOM block y coordinate in meters	FLOAT64	
Data_flag	Flag signalling whether the block contains entirely fill data	INT8	0 = block contains entirely fill data 1 = block contains valid data

Common Per Block Metadata	Definition	Data Type	Valid Values
Geometric DQI	Geometric Data Quality Indicator copied from the L1B2 Terrainprojected parameter file.	FLOAT64	-1 to 1

PerBlockMetadataTime	Definition	Data Type	Valid Values
BlockCenterTime	TAI time of the lower right pixel of the center four pixels in the current block, converted to UTC time, and displayed in CCSDS ASCII time code A format. Note: BlockCenterTime may be incorrect for the first and last blocks processed in a swath.	CHAR8 * 28	

8.5.5 Per-line Metadata Description

None.

8.5.6 Per-pixel Metadata Description

None.

8.5.7 Grid Data Set Descriptions

This section lists the parameters which make up the aerosol grid data sets, including a brief description of each parameter and its format. If a parameter is described in the MISR Level 2 Aerosol Retrieval Algorithm Theoretical Basis (ATB) document [ref. 12 in section 1.3], a cross-reference to the corresponding ATB section or equation is provided.

In order to minimize storage for the Aerosol/Surface Product, some parameters will be packed so

that each bit represents a logical value, or some number of bits within a byte or word represent a flag value. To facilitate the interpretation of scientific data, floating point values are not scaled. Floating point values and integer values may take on a flag value indicating invalid data. Currently, there is a flag value of -9999.0, representing missing floating point data; a flag value of 253, representing missing data for unsigned 8-bit integers; a flag value of 65533, representing missing data for unsigned 16-bit integers; and a flag value of -32768, representing missing data for 16-bit signed integers. In addition, there are flag values representing underflow and overflow. There is a flag value of 254, representing underflow for unsigned 8-bit integers; a flag value of 255, representing overflow for unsigned 8-bit integers; a flag value of 65534, representing underflow for unsigned 16-bit integers; a flag value of 65535, representing overflow for unsigned 16-bit integers; a flag value of -32767, representing underflow for 16-bit signed integers; and a flag value of 32767, representing overflow for 16-bit signed integers. Note that we may later add more flag values to distinguish other reasons that the data are missing (e.g. never computed, arithmetic error, etc.).

Table 8-8: Aerosol Product Field Dimension Descriptions

Dimension	Description	Valid Values
SOMBlockDim	*SOMBlockDim* is the number of SOM blocks in the file. The slowest-varying dimension is implicitly the SOM block dimension. It is not shown in the tables below.	- for the Aerosol and Land Surface files this can vary, with a typical value being approximately 140 - for the Ocean Surface file this will be 6
XDim	*XDim* is the number of lines in a block. The x dimension direction is identical to the standard SOM x dimension.	128 for 1.1 km parameters or 8 for 17.6 km parameters or 2 for 70.4 km parameters
YDim	*YDim* is the number of samples in a block. The y dimension direction is identical to the standard SOM y dimension.	512 for 1.1 km parameters or 32 for 17.6 km parameters or 8 for 70.4 km parameters
NCamDim	*NCamDim* is the number of MISR cameras.	9 where 1 = D forward 2 = C forward 3 = B forward 4 = A forward 5 = A nadir 6 = A aftward 7 = B aftward 8 = C aftward 9 = D aftward
NBandDim	*NBandDim* is the number of bands in a MISR camera.	4 where 1 = Blue 2 = Green 3 = Red 4 = NIR

NParticleTypeDim	*NParticleTypeDim* is the number of classifications of aerosol particles by size and shape.	5 where 1 = Small (radius < 0.35 micron) 2 = Medium (radius 0.35 to 0.7 micron) 3 = Large (radius > 0.7 micron) 4 = Spherical shape 5 = Non-spherical shape
NAerMixtureDim	*NAerMixtureDim* is the maximum number of successful aerosol mixtures to report.	1-100
NTauBinDim	*NTauBinDim* is the number of optical depth bins in *OptDepthHistogram*.	60

Table 8-9: Aerosol Product Grid Dataset Descriptions, part 1

Field Name Parameter Description	Dimension List	Number Type	Units	Transformation	Flag Values
Grid SubregParamsAer (Spatial Resolution: 1.1 km x 1.1 km, XDim = 128, YDim = 512)					
RetrAppMask Retrieval applicability mask *(ATB sec. 3.3.8)*	XDim, YDim, NBandDim, NCamDim	UINT8	n/a	n/a	0 = clear 1 = missing data 2 = poor quality 3 = glitter-contaminated 4 = topo. obscured 5 = topo. shadowed 6 = topo. complex 7 = cloudy 8 = cloud shadow 9 = not smooth 10 = not correlated 11 = region not suitable *12 = optically thick (NO LONGER USED)* 13 = too bright 14 = cloudy other camera 15 = bright other camera 16 = proximate cloud *(NOT USED)* 253 = fill
SubrUsed Subregion used in aerosol retrieval	XDim, YDim	UINT8	n/a	n/a	0 = Subregion not used in retrieval 1 = Subregion used by water algorithm 2 = Subregion used by het algorithm 253 = fill
WaterLeavEqReflExp Water-leaving equivalent reflectance. *(NOT IMPLEMENTED - CURRENTLY SET TO FILL VALUE)*	XDim, YDim, NBandDim	UINT8	n/a	y=(**WaterLeavEqReflExp*ScaleWaterLeavEqReflExp**) + **OffsetWaterLeavEqReflExp**	253 = fill 254 = underflow 255 = overflow

Grid RegParamsAer (Spatial Resolution: 17.6 km x 17.6 km, XDim = 8, YDim = 32)					
RegBestEstimateSpectralOptDepth Best estimate of spectral optical depth for the region *(ATB sec. 3.5.8.2)*	XDim, YDim, NBandDim	FLOAT32	n/a	n/a	-9999 = fill
RegBestEstimateSpectralOptDepthUnc Uncertainty in best estimate of spectral optical depth for the region *(ATB sec. 3.5.8.2)*	XDim, YDim, NBandDim	FLOAT32	n/a	n/a	-9999 = fill
RegBestEstimateAngstromExponent Best estimate of Angstrom exponent for the region *(ATB sec. 3.5.10.2)*	XDim, YDim	FLOAT32	n/a	n/a	-9999 = fill
RegBestEstimateAngstromExponentUnc Uncertainty in best estimate of Angstrom exponent for the region *(ATB sec. 3.5.10.2)*	XDim, YDim	FLOAT32	n/a	n/a	-9999 = fill
RegBestEstimateSpectralSSA Best estimate of spectral single scattering albedo for the region *(ATB sec. 3.5.10.2)*	XDim, YDim, NBandDim	FLOAT32	n/a	n/a	-9999 = fill -8888 = indeterminate
RegBestEstimateSpectralSSAUnc Uncertainty in best estimate of spectral single scattering albedo for the region *(ATB sec. 3.5.10.2)*	XDim, YDim, NBandDim	FLOAT32	n/a	n/a	-9999 = fill -8888 = indeterminate
RegBestEstimateSpectralOptDepthFraction Best estimate of aerosol spectral optical depth fraction binned by size (small, medium, large) and shape (spherical, non-spherical), for the region *(ATB sec. 3.5.10.2)*	XDim, YDim, NBandDim, NParticleTypeDim	FLOAT32	n/a	n/a	-9999 = fill -8888 = indeterminate
RegBestEstimateSpectralOptDepthFractionUnc Uncertainty in best estimate of aerosol spectral optical depth fraction binned by size (small, medium, large) and shape (spherical, non-spherical), for the region *(ATB sec. 3.5.10.2)*	XDim, YDim, NBandDim, NParticleTypeDim	FLOAT32	n/a	n/a	-9999 = fill -8888 = indeterminate
RegBestEstimateNumberFraction Best estimate of aerosol particle	XDim, YDim, NParticleTypeDim	FLOAT32	n/a	n/a	-9999 = fill -8888 = indeterminate

fractional number binned by particle size (small, medium, large) and shape (spherical, non-spherical), for the region *(ATB sec. 3.5.10.2)*					
RegBestEstimateNumberFractionUnc Uncertainty in best estimate of aerosol particle fractional number binned by particle size (small, medium, large) and shape (spherical, non-spherical), for the region *(ATB sec. 3.5.10.2)*	XDim, YDim, NParticleTypeDim	FLOAT32	n/a	n/a	-9999 = fill -8888 = indeterminate
RegBestEstimateVolumeFraction Best estimate of aerosol particle fractional volume binned by aerosol particle size (small, medium, large) and shape (spherical, non-spherical), for the region *(ATB sec. 3.5.10.2)*	XDim, YDim, NParticleTypeDim	FLOAT32	n/a	n/a	-9999 = fill -8888 = indeterminate
RegBestEstimateVolumeFractionUnc Uncertainty in best estimate of aerosol particle fractional volume binned by aerosol particle size (small, medium, large) and shape (spherical, non-spherical), for the region *(ATB sec. 3.5.10.2)*	XDim, YDim, NParticleTypeDim	FLOAT32	n/a	n/a	-9999 = fill -8888 = indeterminate
RegBestEstimateQA Criteria for establishing optical depth and angstrom exponent best estimate and uncertainty. *Does not apply to single scattering albedo, optical depth fraction, number fraction, or volume fraction. *(ATB sec. 3.5.8.2)*	XDim, YDim	UINT8	n/a	n/a	0 = there was 1 successful aerosol mixture; set RegBestEstimateX to value for the single successful mixture; set RegBestEstimateXUnc to fill, except RegBestEstimateSpectralOptD epthUnc, which is set to value of OptDepthUncPerMixture for the successful mixture 1 = there was >1 successful aerosol mixture; set RegBestEstimateX and RegBestEstimateXUnc to mean and standard deviation of X over all successful mixtures 2 = estimates and

					uncertainties are calculated by averaging successful mixtures in neighboring regions 3 = there were no successful mixtures; set all RegBestEstimateX and RegBestEstimateXUnc to fill 253 = fill
RegParticlePropertyQA Quality indicator for single-scattering albedo, optical depth fraction, number fraction, and volume fraction.	XDim, YDim	UINT8	n/a	n/a	0 = good 1 = bad 253 = fill
AlgTypeFlag Algorithm type flag *(ATB sec. 3.4.2.2, 3.4.4.2, 3.4.6.2,3.5.7.2.0)*	XDim, YDim	UINT8	n/a	n/a	0 = no retrieval 1 = dark water retrieval *2 = OTA (optically thick atmosphere) retrieval (NO LONGER USED)* 3 = heterogeneous surface retrieval 8 = homogeneous surface retrieval 253 = fill
RegClassInd Regional classification indicator *(ATB sec. 3.3.1)*	XDim, YDim	UINT8	n/a	n/a	0 = clear region 1 = solar oblique region 2 = topo. complex region 3 = cloudy region 4 = no valid data in region 253 = fill
RegSurfTypeFlag Regional surface type indicator	XDim, YDim	UINT8	n/a	n/a	0 = dark water (non-polar) 1 = shallow/coastal water (nonpolar) 2 = land (nonpolar) 3 = polar dark water 4 = polar shallow/ coastal water 5 = polar land 253 = fill
AerRetrSuccFlag Aerosol retrieval success flag *(ATB sec. 3.5.8.2)*	XDim, YDim	UINT8	n/a	n/a	1 = no success matches with aerosol mixtures *2 = no success matches with aerosol mixtures (NO LONGER USED)* 3 = aerosol retrieval algorithm failure 4 = aerosol retrieval not attempted

					5 = insufficient data to perform aerosol retrieval (NO LONGER USED) *6 = inadequate scene contrast to perform aerosol retrieval (NO LONGER USED)* 7 = successful aerosol retrieval 8 = unsuccessful aerosol retrieval; estimated optical depth used for surface retrieval 253 = fill
NumSuccAerMixture Number of successful mixtures (was previously **NumSuccAerModel**) *(ATB sec. 3.5.8)*	XDim, YDim	UINT8	n/a	n/a	253 = fill

Table 8-10: Aerosol Product Grid Dataset Descriptions, part 2

Field Name Parameter Description	Dimension List	Number Type	Units	Transformation	Flag Values
Grid RegParamsPerMixture (Spatial Resolution: 17.6 km x 17.6 km, XDim = 8, YDim = 32)					
RegLowestResidSpectralOptDepth Optical depth of mixture with the smallest chisquare fitting parameter (chisquare absolute for aerosol mixtures over dark water; chisquare heterogeneous for aerosol mixtures over land), out of successful aerosol mixtures (ATB eq. 82)	XDim, YDim, NBandDim	FLOAT32	n/a	n/a	-9999 = fill
RegLowestResidAngstromExponent Angstrom exponent of mixture with the smallest chi-square fitting parameter (chisquare absolute for aerosol mixtures over dark water; chisquare heterogeneous for aerosol mixtures over land), out of successful aerosol mixtures (ATB sec. 3.5.10.2)	XDim, YDim	FLOAT32	n/a	n/a	-9999 = fill
RegLowestResidChisq Smallest value of chi-square fitting parameter (chi-square absolute for aerosol mixtures	XDim, YDim	FLOAT32	n/a	n/a	-9999 = fill

over dark water; chi-square heterogeneous for aerosol mixtures over land), out of successful aerosol mixtures (ATB sec. 3.5.5.2.1, 3.5.5.2.2, 3.5.5.2.3)					
RegLowestResidCombinedResidual Smallest value of combined residual fitting parameter (a function of retrieval chi-squares and optical depth uncertainty), out of successful aerosol mixtures (ATB sec. 3.5.5.2.1, 3.5.5.2.2, 3.5.5.2.3)	XDim, YDim	FLOAT32	n/a	n/a	-9999 = fill
RegLowestResidMixture Aerosol mixture with smallest chi-square fitting parameter (chisquare absolute for aerosol mixtures over dark water; chi-square heterogeneous for aerosol mixtures over land), out of successful aerosol mixtures (ATB sec. 3.5.5.2.1, 3.5.5.2.2, 3.5.5.2.3)	XDim, YDim	UINT8	n/a	n/a	253 = fill
RegLowestResidMixtureEqRefl Aerosol mixture equivalent reflectances for the mixture identified by RegLowestResidMixture at the optical depth corresponding to RegLowestResidSpectralOptDepth (ATB sec. 3.5.5.2.1, 3.5.5.2.2, 3.5.5.2.3)	XDim, YDim, NBandDim, NCamDim	UINT8	n/a	n/a	253 = fill
AerRetrSuccFlagPerMixture Aerosol retrieval success flag per mixture (was previously **AerCompModId**) *(ATB sec. 3.5.8.1)*	XDim, YDim, NAerMixtureDim	UINT8	n/a	n/a	253 = fill; χ^2s not computed 252 = χ^2s computed, with no successful match 251 = χ^2s computed, with no successful match; this flag value applies when a default mixture is used 1-NMix = χ^2s computed with a successful match; value is equal to mixture number

					identifier
OptDepthPerMixture Column optical depth at 555 nm (was previously **ColOptDepth**) *(ATB sec. 3.5.6.2)*	XDim, YDim, NAerMixtureDim	FLOAT32	n/a	n/a	-9999 = fill
OptDepthUncPerMixture Column optical depth uncertainty at 555 nm (was previously **ColOptDepthUnc**) *(ATB sec. 3.5.6.2)*	XDim, YDim, NAerMixtureDim	FLOAT32	n/a	n/a	-9999 = fill
OptDepthUpBd Optical depth upper bound *(ATB sec. 3.5.4)*	XDim, YDim, NAerMixtureDim	FLOAT32	n/a	n/a	-9999 = fill
OptDepthUpBdCam Camera used to establish optical depth upper bound *(ATB sec. 3.5.4)*	XDim, YDim, NAerMixtureDim	UINT8	n/a	n/a	253 = fill 1 = D forward 2 = C forward 3 = B forward 4 = A forward 5 = A nadir 6 = A aftward 7 = B aftward 8 = C aftward 9 = D aftward
OptDepthUpBdBand Band used to establish optical depth upper bound *(ATB sec. 3.5.4)*	XDim, YDim, NAerMixtureDim	UINT8	n/a	n/a	253 = fill 1 = Blue 2 = Green 3 = Red 4 = NIR
ChisqAbs Absolute chi-square *(ATB eq. 61)*	XDim, YDim, NAerMixtureDim	FLOAT32	n/a	n/a	-9999 = fill
ChisqGeom Geometric chi-square *(ATB eq. 62)*	XDim, YDim, NAerMixtureDim	FLOAT32	n/a	n/a	-9999 = fill
ChisqSpec Spectral chi-square *(ATB eq. 64)*	XDim, YDim, NAerMixtureDim	FLOAT32	n/a	n/a	-9999 = fill
ChisqMaxdev Maximum deviation chi-square *(ATB eq. 66)*	XDim, YDim, NAerMixtureDim	FLOAT32	n/a	n/a	-9999 = fill
ChisqHet Heterogeneous chi-square *(ATB eq. 73)*	XDim, YDim, NAerMixtureDim	FLOAT32	n/a	n/a	-9999 = fill
ChisqHomog Homogeneous chi-square *(ATB sec. 3.4.4.2)*	XDim, YDim, NAerMixtureDim	FLOAT32	n/a	n/a	-9999 = fill
OptDepthHetCalcPerBand Green optical depth retrieved	XDim, YDim, NAerMixtureDi	FLOAT32	n/a	n/a	-9999 = fill

from heterogeneous surface algorithm, calculated per spectral band *(ATB sec. 3.5.5.2.3)*	m, NBandDim				
OptDepthHomogCalcPerBand Green optical depth retrieved from homogeneous surface algorithm, calculated per spectral band *(ATB sec. 3.4.4.2)*	XDim, YDim, NAerMixtureDim, NBandDim	FLOAT32	n/a	n/a	-9999 = fill
ChisqHetCalcPerBand Heterogeneous chi-square, computed per-band *(ATB sec. 3.5.5.2.3)*	XDim, YDim, NBandDim, NAerMixtureDim	FLOAT32	n/a	n/a	-9999 = fill
ChisqHomogCalcPerBand Homogeneous chi-square, computed per-band *(ATB sec. 3.4.4.2)*	XDim, YDim, NBandDim, NAerMixtureDim	FLOAT32	n/a	n/a	-9999 = fill

Table 8-11: Aerosol Product Grid Dataset Descriptions, part 3

Field Name Parameter Description	Dimension List[7]	Number Type	Units	Transformation	Flag Values
Grid RegParamsAlgDiagnostics (Spatial Resolution: 17.6 km x 17.6 km, XDim = 8, YDim = 32)					
RegMeanSpectralOptDepth Regional mean spectral optical depth, computed from optical depths of successful aerosol mixtures (ATB eq. 82)	XDim, YDim, NBandDim	FLOAT32	n/a	n/a	-9999 = fill
RegMedianSpectralOptDepth Regional median spectral optical depth, computed from optical depths of successful aerosol mixtures (ATB eq. 82)	XDim, YDim, NBandDim	FLOAT32	n/a	n/a	-9999 = fill
RegStDevSpectralOptDepth Standard deviation of spectral optical depths of successful aerosol mixtures (ATB eq. 82a)	XDim, YDim, NBandDim	FLOAT32	n/a	n/a	-9999 = fill
RegMeanSpectralSSA Regional mean spectral single-scattering albedo (SSA), computed from SSA of	XDim, YDim, NBandDim	FLOAT32	n/a	n/a	-9999 = fill

7 Fields dimensioned by NAerMixtureDim correspond to the aerosol mixtures described in Section 9.10 of this document. The aerosol mixtures names and properties are contained in the Mixture Product, which must be ordered separately from the Aerosol Product.

successful aerosol mixtures *(ATB sec. 3.5.10.2)*					
RegStDevSpectralSSA Standard deviation of spectral single-scattering albedo (SSA) of successful aerosol mixtures *(ATB sec. 3.5.10.2)*	XDim, YDim, NBandDim	FLOAT32	n/a	n/a	-9999 = fill
RegLowestResidSpectralSSA Spectral single-scattering albedo (SSA) of mixture with smallest chi-square fitting parameter (chisquare absolute for aerosol mixtures over dark water; chi-square heterogeneous for aerosol mixtures over land), out of successful aerosol mixtures *(ATB sec. 3.5.10.2)*	XDim, YDim, NBandDim	FLOAT32	n/a	n/a	-9999 = fill
RegMeanSpectralOptDepthFraction Regional mean of fractional spectral optical depth by size and shape of aerosol particles, computed from optical depth fractions of successful aerosol mixtures *(ATB sec. 3.5.10.2)*	XDim, YDim, NBandDim, NParticleTypeDim	FLOAT32	n/a	n/a	-9999 = fill
RegStDevSpectralOptDepthFraction Standard deviation of spectral optical depth fraction of successful aerosol mixtures *(ATB sec. 3.5.10.2)*	XDim, YDim, NBandDim, NParticleTypeDim	FLOAT32	n/a	n/a	-9999 = fill
RegLowestResidSpectralOptDepthFraction Spectral optical depth fraction of mixture with smallest chi-square fitting parameter (chi-square absolute for aerosol mixtures over dark water; chi-square heterogeneous for aerosol mixtures over land), out of successful aerosol mixtures *(ATB sec. 3.5.10.2)*	XDim, YDim, NBandDim, NParticleTypeDim	FLOAT32	n/a	n/a	-9999 = fill
RegLowestResidNumberFraction Number fraction of mixture with smallest chi-square fitting parameter (chi-square absolute for aerosol mixtures over dark water; chi-square heterogeneous for aerosol mixtures over land), out of successful aerosol mixtures	XDim, YDim, NParticleTypeDim	FLOAT32	n/a	n/a	-9999 = fill

(ATB sec. 3.5.10.2)					
RegLowestResidVolumeFraction Volume fraction of mixture with smallest chi-square fitting parameter (chi-square absolute for aerosol mixtures over dark water; chi-square heterogeneous for aerosol mixtures over land), out of successful aerosol mixtures *(ATB sec. 3.5.10.2)*	XDim, YDim, NParticleTypeDim	FLOAT32	n/a	n/a	-9999 = fill
RegSfcRetrOptDepth Aerosol optical depth to be used in the land surface retrieval *(ATB sec. 3.5.7.2)*	XDim, YDim	FLOAT32	n/a	n/a	-9999 = fill
RegSfcRetrMixture Aerosol mixture to be used in the land surface retrieval *(ATB sec. 3.5.7)*	XDim, YDim	UINT8	n/a	n/a	253 = fill 252 = surface retrieval used an aggregate of all successful mixtures; see **AerRetrSuccFlag PerMixture** for the successful mixtures
RegSfcRetrAlgTypeFlag Algorithm type used to compute aerosol mixture and optical depth *(ATB sec. 3.5.7)*	XDim, YDim	UINT8	n/a	n/a	0 = no retrieval 1 = dark water retrieval *2 = OTA (optically thick atmosphere) retrieval (NO LONGER USED)* 3 = heterogeneous surface retrieval 4 = no successful retrieval; optical depth from ”low optical depth” default 5 = no successful retrieval; optical depth from “optical depth in previous region” default *6 = no successful retrieval; optical depth from “Rayleigh scattering only” default (NO LONGER USED)* 7 = no successful retrieval; optical depth from “optical depth upper bound algorithm” default 8 = homogeneous surface retrieval

					253 = fill
NumCamUsed Number of cameras in each band which meet the minimum number of subregions constraint speci fied in the aerosol science con figuration file. (was previously **NumClearCam**) *(ATB sec. 3.4.3)*	XDim, YDim, NBandDim	UINT8	n/a	n/a	253 = fill
CamRainbowFlag Camera rainbow flag (*ATB sec. 3.3.8.2.9)*	XDim, YDim	UINT16	n/a	1 bit per camera stored. First bit is D_forward camera; ninth bit is D_aft camera. Remainder of bits are zero. D_for = (**CamRain bowFlag** & 1) [8]C_for = (**CamRain bowFlag** & 2) >> 1 B_for = (**CamRain bowFlag** & 4) >> 2 A_for = (**CamRain bowFlag** & 8) >> 3 A_nadir = (**Cam RainbowFlag** & 16) >> 4 A_aft = (**CamRain bowFlag** & 32) >> 5 B_aft = (**CamRain bowFlag** & 64) >> 6 C_aft = (**CamRain bowFlag** & 128) >> 7 D_aft = (**CamRainbowFlag** & 256) >> 8	0 = rainbow-free (one-bit flag) 1 = rainbowinfluenced (onebit flag) 0 = fill (16-bit flag)
NumEofUsed $N_{max(l)}$, or number of EOFs (empirical orthogonal functions) over a heterogeneous surface which meet the constraint in ATB Eq. 75 *(ATB sec. 3.5.5.2.3)*	XDim, YDim, NBandDim	UINT8	n/a	n/a	253 = fill
NumAcceptHetOptDepth Number of EOFs (empirical orthogonal functions) over a het erogeneous surface computed as the maximum value of NumEofUsed and also satisfying aerosol model-	XDim, YDim, NAerMixtureDi m	UINT8	n/a	n/a	253 = fill

8 '&' refers to the bitwise AND operator, and '>>' refers to the right shift operator.

dependent con straints *(ATB sec. 3.5.5.2.3)*					
HetContrast Heterogeneous surface contrast measure (was previously **HetLandContrast**) *(ATB eq. 31)*	XDim, YDim, NBandDim	FLOAT32	n/a	n/a	-9999 = fill
NumAcceptSubr Number of subregions of acceptable quality for retrieval *(ATB sec. 3.5.1.2)*	XDim, YDim, NBandDim, NCamDim	UINT16	n/a	n/a	65533 = fill

Table 8-12: Aerosol Product Grid Dataset Descriptions, part 4

Field Name Parameter Description	Dimension List	Number Type	Units	Transformation	Flag Values
Grid RegParamsEqRefl (Spatial Resolution: 17.6 km x 17.6 km, XDim = 8, YDim = 32)					
RegEqRefl Observed regional equivalent reflectances which were used in the aerosol retrieval *(ATB sec. 3.5.1.2)*	XDim, YDim, NBandDim, NCamDim	FLOAT32	n/a	n/a	-9999 = fill
RegEqReflStDev Standard deviation of observed regional equivalent reflectances *(ATB sec. 3.5.1.2)*	XDim, YDim, NBandDim, NCamDim	FLOAT32	n/a	n/a	-9999 = fill
RegEqReflDarkest Darkest weighted mean equiva lent reflectances in a region *(ATB sec. 3.4.4.2)*	XDim, YDim, NBandDim, NCamDim	FLOAT32	n/a	n/a	-9999 = fill

Table 8-13: Aerosol Product Grid Dataset Descriptions, part 5

Field Name Parameter Description	Dimension List	Number Type	Units	Transformation	Flag Values
Grid RegParamsGeometry (Spatial Resolution: 17.6 km x 17.6 km, XDim = 8, YDim = 32)					
SolZenAng Solar zenith angle *(ATB sec. 3.2.1.4)*	XDim, YDim	FLOAT32	degrees	n/a	-9999 = fill
ViewZenAng View zenith angle (9 cameras) *(ATB sec. 3.2.1.4)*	XDim, YDim, NCamDim	FLOAT32	degrees	n/a	-9999 = fill
RelViewCamAziAng Relative view-Sun azimuth (9 cameras) *(ATB sec. 3.2.1.4)*	XDim, YDim, NCamDim	FLOAT32	degrees	n/a	-9999 = fill
ScatterAng	XDim, YDim,	FLOAT32	degrees	n/a	-9999 = fill

Scattering angle (9 cameras) *(ATB eq. 11)*	NCamDim				
GlitterAng Glitter angle (9 cameras) *(Level 2 Ancillary ATB eq. 37)*	XDim, YDim, NCamDim	FLOAT32	degrees	n/a	-9999 = fill

Table 8-14: Aerosol Product Grid Dataset Descriptions, part 6

Field Name Parameter Description	Dimension List	Number Type	Units	Transformation	Flag Values
Grid RegParamsEnvironmental (Spatial Resolution: 17.6 km x 17.6 km, XDim = 8, YDim = 32)					
ColOzAbund Column ozone abundance *(ATB eq. 8d)*	XDim, YDim	FLOAT32	Dobson	n/a	-9999 = fill
ColOzAbundSrc Ozone data source *(ATB sec. 3.3.7.2)*	XDim, YDim	UINT8	n/a	n/a	0 = no data available 1 = TASC -> DAO not available 2 = TASC -> DAO out of bounds 3 = DAO 253 = fill
SfcWindsp Near-surface wind speed *(ATB eq. 7a)*	XDim, YDim	FLOAT32	m/s	n/a	-9999 = fill
SfcWindspSrc Wind speed data source *(ATB sec. 3.3.6.2)*	XDim, YDim	UINT8	n/a	n/a	0 = no data available 1 = TASC -> DAO not available 2 = TASC -> DAO out of bounds 3 = DAO 253 = fill
SfcPres Surface pressure *(ATB sec. 3.2.2.4.3)*	XDim, YDim	FLOAT32	hPa	n/a	-9999 = fill
SfcPresSrc Surface pressure data source *(ATB sec. 3.2.2.4)*	XDim, YDim	UINT8	n/a	n/a	0 = no data available 1 = TASC -> DAO not available 2 = TASC -> DAO out of bounds 3 = DAO 253 = fill
RegAltPres Atmospheric pressure at regional terrain altitude *(ATB eq. 6)*	XDim, YDim	FLOAT32	hPa	n/a	-9999 = fill
RegAltPresSrc Atmospheric pressure at regional terrain altitude data source *(ATB sec. 3.3.6.2)*	XDim, YDim	UINT8	n/a	n/a	0 = no data available 1 = TASC -> DAO not available 2 = TASC -> DAO out of bounds

					3 = DAO 253 = fill
SfcAirTemp Surface air temperature *(ATB sec. 3.2.2.4.4)*	XDim, YDim	FLOAT32	K	n/a	-9999 = fill
SfcAirTempSrc Surface air temperature data source *(ATB sec. 3.2.2.4.4)*	XDim, YDim	UINT8	n/a	n/a	0 = no data available 1 = TASC -> DAO not available 2 = TASC -> DAO out of bounds 3 = DAO 253 = fill
RegAltAirTemp Air temperature at regional terrain altitude *(ATB sec. 3.2.2.4.4)*	XDim, YDim	FLOAT32	K	n/a	-9999 = fill
RegAltAirTempSrc Air temperature at regional terrain altitude data source *(ATB sec. 3.2.2.4.4)*	XDim, YDim	UINT8	n/a	n/a	0 = no data available 1 = TASC -> DAO not available 2 = TASC -> DAO out of bounds 3 = DAO 253 = fill
ColPrecipWater Column precipitable water *(ATB sec. 3.3.6.1)*	XDim, YDim	FLOAT32	mm	n/a	-9999 = fill
ColPrecipWaterSrc Column precipitable water data source *(ATB sec. 3.3.6.1)*	XDim, YDim	UINT8	n/a	n/a	0 = no data available 1 = TASC -> DAO not available 2 = TASC -> DAO out of bounds 3 = DAO -> MODIS not available 4 = DAO -> MODIS out of bounds 5 = MODIS 253 = fill
Grid DomParamsAer (Spatial Resolution: 70.4 km x 70.4 km, XDim = 2, YDim = 8)					
DomMeanOptDepth Mean optical depth over a domain *(ATB sec. 3.5.8.2)*	XDim, YDim	FLOAT32	n/a	n/a	-9999 = fill
DomMedOptDepth Median optical depth over a domain *(ATB sec. 3.5.8.2)*	XDim, YDim	FLOAT32	n/a	n/a	-9999 = fill
OptDepthHistogram Histogram of optical depths, per mixture *(ATB sec. 3.5.8.2)*	XDim, YDim, NAerMixtureDim, NTauBinDim	UINT8	n/a	n/a	253 = fill

8.5.8 Per-grid QA Metadata

Table 8-15: Per-grid QA Metadata for Aerosol Products.

Data Field Name	Data Type	Field Dimensions	Valid Range
SwathQaGlobal			
NRegWAnyGoodDwSub Number of regions containing at least one good (non-fill) dark water subregion.	INT32	--	0-36,352
NRegWNoGoodDwSub Number of regions containing no good (non-fill) dark water subregions, but containing at least one good (non-fill) other subregion.	INT32	--	0-36,352
NSubWGoodData Number of subregions containing good (non-fill) data.	INT32	--	0-36,352
NPixEqReflNoCorrect Number of 1.1 km x 1.1 km pixels to which a spectral out-of-band correction was not applied.	INT32	NCamDim	0-9,306,112
NRegDwAlgProcSw Number of regions processed with the aerosol retrieval algorithm for a dark water surface.	INT32	--	0-36,352
NRegDwAlgSuccSw Number of regions processed with the aerosol retrieval algorithm for a dark water surface, with a successful retrieval result.	INT32	--	0-36,352
NRegWaterAlgProcSw Number of regions processed with the aerosol water algorithm.	INT32	--	0-36,352
NRegWaterAlgSuccSw Number of regions processed with the aerosol water algorithm, with a successful retrieval result.	INT32	--	0-36,352
NRegEofAlgProcSw Number of regions processed with the aerosol retrieval algorithm for a heterogeneous land surface.	INT32	--	0-36,352
NRegEofAlgSuccSw Number of regions processed with the aerosol retrieval algorithm for a heterogeneous land surface, with a successful retrieval result.	INT32	--	0-36,352
NTauEqZero Number of regions for which the retrieved aerosol optical depth was zero.	INT32	NAerMixtureDim	0-36,352
NTauEqTauUpBd Number of regions for which the retrieved aerosol optical depth was equal to the optical depth upper bound.	INT32	NAerMixtureDim	0-36,352
NTauGreaterThanTauUpBd Number of regions for which the retrieved aerosol optical depth was greater than the optical depth upper bound.	INT32	NAerMixtureDim	0-36,352
BlockQAGlobal			

BlockNumber Block number.	INT32	--	1-180
ValidRecord Indicates if valid data are present for the block.	UINT8	--	0,1
NRegWAnyGoodDWSub Number of regions containing at least one good (non-fill) dark water subregion.	INT32	--	0-256
NRegWNoGoodDWSub Number of regions containing no good (non-fill) dark water subregions, but containing at least one good (non-fill) other subregion.	INT32	--	0-256
NRegDwAlgProc Number of regions processed with the aerosol retrieval algorithm for a dark water surface.	INT32	--	0-256
NRegDwAlgSucc Number of regions processed with the aerosol retrieval algorithm for a dark water surface, with a successful retrieval result.	INT32	--	0-256
NRegWaterAlgProc Number of regions processed with the aerosol water algorithm.	INT32	--	0-256
NRegWaterAlgSucc Number of regions processed with the aerosol water algorithm with a successful retrieval result.	INT32	--	0-256
NRegEofAlgProc Number of regions processed with the aerosol retrieval algorithm for a heterogeneous land surface.	INT32	--	0-256
NRegEofAlgSucc Number of regions processed with the aerosol retrieval algorithm for a heterogeneous land surface, with a successful retrieval result.	INT32	--	0-256
NRegObliqueSunAng Number of regions not processed due to oblique solar illumination angle.	INT32	--	0-256
NRegTopoComplex Number of regions not processed due to regional topographic complexity.	INT32	--	0-256
NRegReglCloudy Number of regions not processed due to regional cloudiness.	INT32	--	0-256
NRegNoGoodSubData Number of regions not processed due to the absence of any good subregion data.	INT32	--	0-256
NRegOzDAOAvailOOB Number of regions for which DAO ozone data are available but out-of-bounds.	INT32	--	0-256
NRegOzDAONotAvail Number of regions for which DAO ozone data are not available.	INT32	--	0-256
NRegWsDAOAvailOOB Number of regions for which DAO wind speed data are available but out-of-bounds.	INT32	--	0-256
NRegWsDAONotAvail	INT32	--	0-256

Number of regions for which DAO wind speed data are not available.			
NRegPsDAOAvailOOB Number of regions for which DAO surface pressure data are available but out-of-bounds.	INT32	--	0-256
NRegPsDAONotAvail Number of regions for which DAO surface pressure data are not available.	INT32	--	0-256
NRegTsDAOAvailOOB Number of regions for which DAO surface temperature data are available but out-of-bounds.	INT32	--	0-256
NRegTsDAONotAvail Number of regions for which DAO surface temperature data are not available.	INT32	--	0-256
NRegGeopHtNotAvail Number of regions for which geopotential height data are not available.	INT32	--	0-256
NRegPtDAOCalcOOB Number of regions for which the pressure at terrain height calculated using DAO surface pressure data is out-of-bounds.	INT32	--	0-256
NRegTtDAOCalcOOB Number of regions for which the air temperature at terrain height calculated using DAO surface termperature data is out-of-bounds.	INT32	--	0-256
NRegCpwModAvailOOB Number of regions for which the MODIS column precipitable water amount is available but out-of-bounds.	INT32	--	0-256
NRegCpwModNotAvail Number of regions for which the MODIS column precipitable water amount is not available.	INT32	--	0-256
NRegCpwDAOAvailOOB Number of regions for which the DAO column precipitable water amount is available but out-of-bounds.	INT32	--	0-256
NRegCpwDAONotAvail Number of regions for which the DAO column precipitable water amount is not available.	INT32	--	0-256
NRegCirTCAvail Number of regions for which L2TC cirrus data are available.	INT32	--	0-256
NRegCirModAvailOOB Number of regions for which L2TC cirrus data are available but out-of-bounds.	INT32	--	0-256
NRegCirModNotAvail Number of regions for which MODIS cirrus data are not available.	INT32	--	0-256
NRegStrSagAvailOOB Number of regions for which stratospheric aerosol data from SAGE are available but out-of-bounds.	INT32	--	0-256
NRegStrSagNotAvail Number of regions for which stratospheric aerosol data from SAGE are not available.	INT32	--	0-256

NRegStrModAvailOOB Number of regions for which stratospheric aerosol data from MODIS are available but out-of-bounds.	INT32	--	0-256
NRegStrModNotAvail Number of regions for which stratospheric aerosol data from MODIS are not available.	INT32	--	0-256
NSubWGoodData Number of subregions containing good (non-fill) data.	INT32	--	0-65,536
NTauEqZero Number of regions for which the retrieved aerosol optical depth was zero.	INT32	NAerMix tureDim	0-256
NTauEqTauUpBd Number of regions for which the retrieved aerosol optical depth was equal to the optical depth upper bound.	INT32	NAerMix tureDim	0-256
NTauGreaterThanTauUpBd Number of regions for which the retrieved aerosol optical depth was greater than the optical depth upper bound.	INT32	NAerMix tureDim	0-256
NPixEqReflNoCorrect Number of 1.1 km x 1.1 km pixels to which a spectral out-of-band correction was not applied.	INT32	NCamDim	0-262,144
NSubHighValEqReflBlue Number of subregions with high-valued equivalent reflectances in the blue band.	INT32	NCamDim	0-65,536
NSubHighValEqReflGreen Number of subregions with high-valued equivalent reflectances in the green band.	INT32	NCamDim	0-65,536
NSubHighValEqReflRed Number of subregions with high-valued equivalent reflectances in the red band.	INT32	NCamDim	0-65,536
NSubHighValEqReflNir Number of subregions with high-valued equivalent reflectances in the near-infrared band.	INT32	NCamDim	0-65,536
CloudMaskSrc Data source for cloud mask.	INT32	--	SDCM values available from MISR TOA/Cloud product
			Defaulted to Georectified Radiance Product RCCM
CloudShadowMaskSrc Data source for cloud shadow mask.	INT32	--	Cloud shadow mask available from MISR TOA/ Cloud Product
			Cloud shadow mask not available
TopoShadowMaskSrc Data source for topographic shadow mask.	INT32	--	Topographic shadow mask available from MISR TOA/Cloud Product
			Topographic shadow mask not available

GeomDataQualInd Geometric calibration data quality indicator.	FLOAT64	--	-1 to 1

8.6 MISR LEVEL 2 MIL2ASLS LAND SURFACE PRODUCT

8.6.1 File Metadata Description

Table 8-16: File Metadata for Land Surface Product Files

File Metadata Field Name	Definition	Data Type	Units	Valid Range
Path_number	Orbit path number	INT32	N/A	1-233
AGP_version_id	Version identifier for AGP	INT32	N/A	2
DID_version_id	Version identifier for DID (DTED [Digital Terrain Elevation Dataset] Intermediate Dataset)	INT32	N/A	4
Number_blocks	Total number of blocks	INT32	N/A	1-180
Ocean_blocks_size	Ocean_blocks.number dimension	INT32	N/A	1-180
Ocean_blocks.count	Total number of blocks containing entirely ocean radiances	INT32	N/A	1-180
Ocean_blocks.numbers	List of block numbers containing entirely ocean radiances	INT32	N/A	1-180
SOM_parameters.som_ellipsoid.a	Semimajor axis of ellipsoid	FLOAT64	meters	WGS84 ellipsoid
SOM_parameters.som_ellipsoid.e2	Eccentricity of ellipsoid squared	FLOAT64	N/A	WGS84 ellipsoid
SOM_parameters.som_orbit.aprime	Semimajor axis of orbit	FLOAT64	meters	Not used.
SOM_parameters.som_orbit.eprime	Eccentricity of orbit	FLOAT64	N/A	Not used.
SOM_parameters.som_orbit.gamma	Longitude of perigee	FLOAT64	radians	Not used.
SOM_parameters.som_orbit.nrev	Number of revolutions per ground track repeat cycle	INT32	N/A	233
SOM_parameters.som_orbit.ro	Radius of circular orbit	FLOAT64	meters	7.0780408E+06
SOM_parameters.som_orbit.i	Inclination of orbit (degrees)	FLOAT64	radians	1.7157253
SOM_parameters.som_orbit.P2P1	Ratio of time of revolution over length of Earth rotation/orbit	FLOAT64	N/A	6.8666667E-02
SOM_parameters.som_orbit.lambda0	Geodetic longitude of ascending node at time 0 (degrees)	FLOAT64	radians	-2π to 2π
Origin_block.ulc.x	SOM X coordinate (in meters) of the upper left corner of the first block	FLOAT64	meters	6 million to 33 million

Origin_block.ulc.y	SOM Y coordinate (in meters) of the upper left corner of the first block	FLOAT64	meters	+/- 12 million
Origin_block.lrc.x	SOM X coordinate (in meters) of the lower right corner of the first block	FLOAT64	meters	6 million to 33 million
Origin_block.lrc.y	SOM Y coordinate (in meters) of the lower right corner of the first block	FLOAT64	meters	+/- 12 million
Start_block	The block number in the AGP which corresponds to the first block in this file containing data.	INT32	N/A	1 - 180 Start_block < End block
End block	The block number in the AGP which corresponds to the last block in this file containing data.	INT32	N/A	1 - 180 Start_block < End block
Cam_mode	Indicates whether the data in this grid file was obtained in MISR global mode or local mode.	INT32	N/A	0-1 1 = global 0 = local
Num_local_modes	The number of MISR local mode acquisitions contained in this file.	INT32	N/A	0-6 0 if data is global mode
Local_mode_site_name	The geographical name of the first local mode site contained in this file.	CHAR8	N/A	string up to 12 characters in length, including null
Orbit_QA	Indication of the overall quality of the orbit data based on analysis of quality flags in the spacecraft attitude and ephemeris data. Geolocation accuracy may be impaired for orbits with poor quality orbit data.	FLOAT32	N/A	-9999.0 = NoRetrieval, -1.0 = Poor, 0.0 = Nominal

8.6.2 Vdata Description

HDF vdatas are used in the land surface product as “flag legends,” which map flag values to their definitions. Flag legend vdatas consist of two fields called "Value" and "Description." The "Value" field is of type UINT8, and consists of one element. The "Description" field is of type CHAR8, and consists of 80 elements. There is one record per flag value. The flag legends are summarized below. To obtain the actual values of the flag values and descriptions, read the vdatas in the file, or refer to Table 8-21 in this document.

Table 8-17: Land Surface Product File Vdata Summary

Vdata Name	Number of Records	Fields	Number of Values	Data Type
RDQI Flag Legend	4	Value	1	UINT8
		Description	1	CHAR8
BiomeBestEstimate Flag Legend	10	Value	1	UINT8
		Description	1	CHAR8
LAIBestEstimateQA Flag Legend	5	Value	1	UINT8

		Description	1	CHAR8
LAIQA Flag Legend	5	Value	1	UINT8
		Description	1	CHAR8

8.6.3 Per-grid Metadata Description

Table 8-18: Per-grid Metadata for Land Surface Product Files

Common Grid Metadata	Definition	Data Type	Valid Values
Block_size.resolution_x	Resolution of block x dimension in meters	INT32	1100, 17600
Block_size.resolution_y	Resolution of block y dimension in meters	INT32	1100, 17600
Block_size.size_x	Block x dimension	INT32	128, 8
Block_size.size_y	Block y dimension	INT32	512, 32

Land Surface Grid Metadata	Definition	Data Type	Valid Values
Land Surface SubregParamsLnd (1.1 km x 1.1 km)			
Min LandHDRF	Minimum value for field	FLOAT32	Read from grid metadata in file.
Max LandHDRF	Maximum value for field	FLOAT32	Read from grid metadata in file.
Scale LandHDRF	Scale factor to apply	FLOAT32	Read from grid metadata in file.
Offset LandHDRF	Offset factor to apply	FLOAT32	Read from grid metadata in file.
Fill LandHDRF	Fill value for field	UINT16	Read from grid metadata in file.
Underflow LandHDRF	Underflow flag value	UINT16	Read from grid metadata in file.
Overflow LandHDRF	Overflow flag value	UINT16	Read from grid metadata in file.
Min LandHDRFUnc	Minimum value for field	FLOAT32	Read from grid metadata in file.
Max LandHDRFUnc	Maximum value for field	FLOAT32	Read from grid metadata in file.
Scale LandHDRFUnc	Scale factor to apply	FLOAT32	Read from grid metadata in file.
Offset LandHDRFUnc	Offset factor to apply	FLOAT32	Read from grid metadata in file.
Fill LandHDRFUnc	Fill value for field	UINT16	Read from grid metadata in file.
Underflow LandHDRFUnc	Underflow flag value	UINT16	Read from grid metadata in file.
Overflow LandHDRFUnc	Overflow flag value	UINT16	Read from grid metadata in file.
Min LandBHR	Minimum value for field	FLOAT32	Read from grid metadata in file.
Max LandBHR	Maximum value for field	FLOAT32	Read from grid metadata in file.
Scale LandBHR	Scale factor to apply	FLOAT32	Read from grid metadata in file.
Offset LandBHR	Offset factor to apply	FLOAT32	Read from grid metadata in file.

Fill LandBHR	Fill value for field	UINT8	Read from grid metadata in file.
Underflow LandBHR	Underflow flag value	UINT8	Read from grid metadata in file.
Overflow LandBHR	Overflow flag value	UINT8	Read from grid metadata in file.
Min LandBHRRelUnc	Minimum value for field	FLOAT32	Read from grid metadata in file.
Max LandBHRRelUnc	Maximum value for field	FLOAT32	Read from grid metadata in file.
Scale LandBHRRelUnc	Scale factor to apply	FLOAT32	Read from grid metadata in file.
Offset LandBHRRelUnc	Offset factor to apply	FLOAT32	Read from grid metadata in file.
Fill LandBHRRelUnc	Fill value for field	UINT8	Read from grid metadata in file.
Underflow LandBHRRelUnc	Underflow flag value	UINT8	Read from grid metadata in file.
Overflow LandBHRRelUnc	Overflow flag value	UINT8	Read from grid metadata in file.
Min LandBRF	Minimum value for field	FLOAT32	Read from grid metadata in file.
Max LandBRF	Maximum value for field	FLOAT32	Read from grid metadata in file.
Scale LandBRF	Scale factor to apply	FLOAT32	Read from grid metadata in file.
Offset LandBRF	Offset factor to apply	FLOAT32	Read from grid metadata in file.
Fill LandBRF	Fill value for field	UINT16	Read from grid metadata in file.
Underflow LandBRF	Underflow flag value	UINT16	Read from grid metadata in file.
Overflow LandBRF	Overflow flag value	UINT16	Read from grid metadata in file.
Min LandDHR	Minimum value for field	FLOAT32	Read from grid metadata in file.
Max LandDHR	Maximum value for field	FLOAT32	Read from grid metadata in file.
Scale LandDHR	Scale factor to apply	FLOAT32	Read from grid metadata in file.
Offset LandDHR	Offset factor to apply	FLOAT32	Read from grid metadata in file.
Fill LandDHR	Fill value for field	UINT16	Read from grid metadata in file.
Underflow LandDHR	Underflow flag value	UINT16	Read from grid metadata in file.
Overflow LandDHR	Overflow flag value	UINT16	Read from grid metadata in file.
Min BRFModParam1	Minimum value for field	FLOAT32	Read from grid metadata in file.
Max BRFModParam1	Maximum value for field	FLOAT32	Read from grid metadata in file.
Scale BRFModParam1	Scale factor to apply	FLOAT32	Read from grid metadata in file.
Offset BRFModParam1	Offset factor to apply	FLOAT32	Read from grid metadata in file.
Fill BRFModParam1	Fill value for field	UINT16	Read from grid metadata in file.
Underflow BRFModParam1	Underflow flag value	UINT16	Read from grid metadata in file.
Overflow BRFModParam1	Overflow flag value	UINT16	Read from grid metadata in file.
Min BRFModParam2	Minimum value for field	FLOAT32	Read from grid metadata in file.
Max BRFModParam2	Maximum value for field	FLOAT32	Read from grid metadata in file.
Scale BRFModParam2	Scale factor to apply	FLOAT32	Read from grid metadata in file.
Offset BRFModParam2	Offset factor to apply	FLOAT32	Read from grid metadata in file.
Fill BRFModParam2	Fill value for field	UINT8	Read from grid metadata in file.
Underflow BRFModParam2	Underflow flag value	UINT8	Read from grid metadata in file.
Overflow BRFModParam2	Overflow flag value	UINT8	Read from grid metadata in file.
Min BRFModParam3	Minimum value for field	FLOAT32	Read from grid metadata in file.
Max BRFModParam3	Maximum value for field	FLOAT32	Read from grid metadata in file.
Scale BRFModParam3	Scale factor to apply	FLOAT32	Read from grid metadata in file.

Offset BRFModParam3	Offset factor to apply	FLOAT32	Read from grid metadata in file.
Fill BRFModParam3	Fill value for field	UINT8	Read from grid metadata in file.
Underflow BRFModParam3	Underflow flag value	UINT8	Read from grid metadata in file.
Overflow BRFModParam3	Overflow flag value	UINT8	Read from grid metadata in file.
Min BRFModFitResid	Minimum value for field	FLOAT32	Read from grid metadata in file.
Max BRFModFitResid	Maximum value for field	FLOAT32	Read from grid metadata in file.
Scale BRFModFitResid	Scale factor to apply	FLOAT32	Read from grid metadata in file.
Offset BRFModFitResid	Offset factor to apply	FLOAT32	Read from grid metadata in file.
Fill BRFModFitResid	Fill value for field	UINT16	Read from grid metadata in file.
Underflow BRFModFitResid	Underflow flag value	UINT16	Read from grid metadata in file.
Overflow BRFModFitResid	Overflow flag value	UINT16	Read from grid metadata in file.
Min NDVI	Minimum value for field	FLOAT32	Read from grid metadata in file.
Max NDVI	Maximum value for field	FLOAT32	Read from grid metadata in file.
Scale NDVI	Scale factor to apply	FLOAT32	Read from grid metadata in file.
Offset NDVI	Offset factor to apply	FLOAT32	Read from grid metadata in file.
Fill NDVI	Fill value for field	UINT8	Read from grid metadata in file.
Underflow NDVI	Underflow flag value	UINT8	Read from grid metadata in file.
Overflow NDVI	Overflow flag value	UINT8	Read from grid metadata in file.
Min LAIMean1	Minimum value for field	FLOAT32	Read from grid metadata in file.
Max LAIMean1	Maximum value for field	FLOAT32	Read from grid metadata in file.
Scale LAIMean1	Scale factor to apply	FLOAT32	Read from grid metadata in file.
Offset LAIMean1	Offset factor to apply	FLOAT32	Read from grid metadata in file.
Fill LAIMean1	Fill value for field	UINT8	Read from grid metadata in file.
Underflow LAIMean1	Underflow flag value	UINT8	Read from grid metadata in file.
Overflow LAIMean1	Overflow flag value	UINT8	Read from grid metadata in file.
Min LAIMean2	Minimum value for field	FLOAT32	Read from grid metadata in file.
Max LAIMean2	Maximum value for field	FLOAT32	Read from grid metadata in file.
Scale LAIMean2	Scale factor to apply	FLOAT32	Read from grid metadata in file.
Offset LAIMean2	Offset factor to apply	FLOAT32	Read from grid metadata in file.
Fill LAIMean2	Fill value for field	UINT8	Read from grid metadata in file.
Underflow LAIMean2	Underflow flag value	UINT8	Read from grid metadata in file.
Overflow LAIMean2	Overflow flag value	UINT8	Read from grid metadata in file.
Min SubrVar	Minimum value for field	FLOAT32	Read from grid metadata in file.
Max SubrVar	Maximum value for field	FLOAT32	Read from grid metadata in file.
Scale SubrVar	Scale factor to apply	FLOAT32	Read from grid metadata in file.
Offset SubrVar	Offset factor to apply	FLOAT32	Read from grid metadata in file.
Fill SubrVar	Fill value for field	UINT8	Read from grid metadata in file.
Underflow SubrVar	Underflow flag value	UINT8	Read from grid metadata in file.
Overflow SubrVar	Overflow flag value	UINT8	Read from grid metadata in file.

8.6.4 Per-block Metadata Description

Table 8-19: Per-block Metadata for Land Surface Product Files

PerBlockMetadataCommon	Definition	Data Type	Valid Values
Block_number	Current block number	INT32	1-180
Ocean_flag	Flag signalling whether the block contains entirely ocean radiances	INT8	0 = block has no ocean or is a mix of ocean and land 1 = block is entirely ocean
Block_coor_ulc_som_meter.x	Upper left corner SOM block x coordinate in meters	FLOAT64	
Block_coor_ulc_som_meter.y	Upper left corner SOM block y coordinate in meters	FLOAT64	
Block_coor_lrc_som_meter.x	Lower right corner SOM block x coordinate in meters	FLOAT64	
Block_coor_lrc_som_meter.y	Lower right corner SOM block y coordinate in meters	FLOAT64	
Data_flag	Flag signalling whether the block contains entirely fill data	INT8	0 = block contains entirely fill data 1 = block contains valid data

Common Per Block Metadata	Definition	Data Type	Valid Values
Geometric DQI	Geometric Data Quality Indicator copied from the L1B2 Terrainprojected parameter file.	FLOAT64	-1 to 1

PerBlockMetadataTime	Definition	Data Type	Valid Values
BlockCenterTime	TAI time of the lower right pixel of the center four pixels in the current block, converted to UTC time, and displayed in CCSDS ASCII time code A format. Note: BlockCenterTime may be incorrect for the first and last blocks processed in a swath.	CHAR8 * 28	

8.6.5 Per-line Metadata Description

None.

8.6.6 Per-pixel Metadata Description

None.

8.6.7 Grid Data Set Descriptions

This section lists the parameters which make up the land surface grid data sets, including a brief description of each parameter and its format. If a parameter is described in the MISR Level 2 Surface Retrieval Algorithm Theoretical Basis (ATB) document [ref. 13 in section 1.3], a cross-reference to the corresponding ATB section or equation is provided.

In order to minimize storage for the Aerosol/Surface Product, some parameters will be packed so that each bit represents a logical value, or some number of bits within a byte or word represent a flag value. Floating point values and integer values may take on a flag value indicating invalid data. Currently, there is a flag value of -9999.0, representing missing floating point data; a flag value of 253, representing missing data for unsigned 8-bit integers; a flag value of 65533, representing missing data for unsigned 16-bit integers; and a flag value of -32768, representing missing data for 16-bit signed integers. In addition, there are flag values representing underflow and overflow. There is a flag value of 254, representing underflow for unsigned 8-bit integers; a flag value of 255, representing overflow for unsigned 8-bit integers; a flag value of 65534, representing underflow for unsigned 16-bit integers; a flag value of 65535, representing overflow for unsigned 16-bit integers; a flag value of -32767, representing underflow for 16-bit signed integers; and a flag value of 32767, representing overflow for 16-bit signed integers. Note that we may later add more flag values to distinguish other reasons that the data are missing (e.g. never computed, arithmetic error, etc.).

Some parameters are stored in scaled form. The equation for transforming them back to their unscaled form is described in the 'Transformation' column of Table 8-21. The scale and offset parameters referred to in the 'Transformation' column are stored in the grid metadata.

Table 8-20: Land Surface Product Field Dimension Descriptions

Dimension	Description	Valid Values
SOMBlockDim	*SOMBlockDim* is the number of SOM blocks in the file. The slowest-varying dimension is implicitly the SOM block dimension. It is not shown in the tables below.	- for the Aerosol and Land Surface files this can vary, with a typical value being approximately 140 - for the Ocean Surface file this will be 6
XDim	*XDim* is the number of lines in a block. The x dimension direction is identical to the standard SOM x dimension.	128 for 1.1 km parameters or 8 for 17.6 km parameters
YDim	*YDim* is the number of samples in a block. The y dimension direction is identical to the standard SOM y dimension.	512 for 1.1 km parameters or 32 for 17.6 km parameters
NCamDim	*NCamDim* is the number of MISR cameras.	9

		where 1 = D forward 2 = C forward 3 = B forward 4 = A forward 5 = A nadir 6 = A aftward 7 = B aftward 8 = C aftward 9 = D aftward
NBandDim	*NBandDim* is the number of bands in a MISR camera.	4 where 1 = Blue 2 = Green 3 = Red 4 = NIR
NFparSfcTypeVegDim	*NFparSfcTypeVegDim* is the number of vegetative FPAR surface types.	6 where 1 = Grasses and cereal crops 2 = Shrubland 3 = Broadleaf crops 4 = Savanna 5 = Broadleaf forest 6 = Needleleaf forest

Table 8-21: Land Surface Product Grid Dataset Descriptions.

Field Name Parameter Description	Dimension List	Number Type	Units	Transformation [9]	Flag Values
Grid SubregParamsLnd (Spatial Resolution: 1.1 km x 1.1 km, XDim = 128, YDim = 512)					
LandHDRF Hemispherical-directional reflectance factor for non-isotropic incident radiation (HDRF), which is the ratio of the radiance reflected from the surface to that from an ideal lambertian target reflected into the same beam geometry and illuminated under identical atmospheric conditions *(ATB eq. 40)*	XDim, YDim, NBandDim, NCamDim	UINT16	n/a	If the HDRF value is not fill, overflow or underflow, do the following: Remove the least significant bit, which is a flag value: x = floor (**LandHDRF** / 2) Then unscale the value: y=(x***Scale LandHDRF**) + **Offset LandHDRF**	65533 = fill 65534 = underflow 65535 = overflow least significant bit: '0' indicates that HDRF results were obtained using the original (non-interpolated) equivalent reflectances as input. '1' indicates that HDRF results were obtained using interpolated equivalent reflectances as

9 Scale and offset values can be read from the grid metadata, and are also listed in Table 8-18.

					input.
LandHDRFUnc HDRF uncertainty *(ATB eq. 50)*	XDim, YDim, NBandDim, NCamDim	UINT16	n/a	y=(LandHDRFUnc***Scale LandHDRFUnc**) + **Offset LandHDRFUnc**	65533 = fill 65534 = underflow 65535 = overflow
RDQI Radiometric Data Quality Indicator *(ATB sec. 3.2.1.3)*	XDim, YDim, NBandDim, NCamDim	UINT8	n/a	n/a	0 = Within specifications 1 = Reduced accuracy 2 = Not usable for science 3 = Unusable for any purpose 253 = fill *Note that for land sur face processing, only radiance values <= $RDQI_1$ are considered acceptable for use in processing. $RDQI_1$ is a threshold specified in the L2AS Config file, in the Land Surface sec tion.*
LandBHR Bihemispherical reflectance for non-isotropic incident radiation (BHR), which is the ratio of the radiant exitance to the irradiance *(ATB eq. 38)*	XDim, YDim, NBandDim	UINT8	n/a	y=(LandBHR***Scale LandBHR**) + **Offset LandBHR**	253 = fill 254 = underflow 255 = overflow
LandBHRRelUnc BHR relative uncertainty *(ATB eq. 58)*	XDim, YDim, NBandDim	UINT8	n/a	y=(LandBHRRelUnc***Scale LandBHRRelUnc**) + **Offset LandBHRRelUnc**	253 = fill 254 = underflow 255 = overflow
LandBRF Bidirectional reflectance factor (BRF), which is the bidirectional reflectance distribution function of the target ratioed to the bidirectional reflectance distribution function from a nonabsorbing lambertian surface *(ATB eq. 89)*	XDim, YDim, NBandDim, NCamDim	UINT16	n/a	If the BRF value is not fill, overflow or underflow, do the following: Remove the least significant bit, which is a flag value: x = floor(**LandBRF**/2) Then unscale the value: y=(x***Scale LandBRF**) + **Offset LandBRF**	65533 = fill 65534 = underflow 65535 = overflow least significant bit: '0' indicates that BRF results were obtained using the original (non-interpolated) equivalent reflectances as input. '1' indicates that BRF results were obtained using interpolated equivalent reflectances as input.

LandDHR Directional-hemispherical reflectance (DHR), which is the hemispherically integrated **LandBRF** *(ATB eq. 87)*	XDim, YDim, NBandDim	UINT8	n/a	y=(LandDHR***Scale LandDHR**) + **Offset LandDHR**	253 = fill 254 = underflow 255 = overflow
BRFModParam1 1st BRF model parameter, *(ATB eq. 78, free parameter r_0)*	XDim, YDim, NBandDim	UINT16	n/a	y=(BRFModParam1***Scale BRFModParam1**) + **Offset BRFModParam1**	65533 = fill 65534 = underflow 65535 = overflow
BRFModParam2 *(ATB eq. 78, free parameter k)*	XDim, YDim, NBandDim	UINT8	n/a	y=(BRFModParam2***Scale BRFModParam2**) + **Offset BRFModParam2**	253 = fill 254 = underflow 255 = overflow
BRFModParam3 *(ATB eq. 78, free parameter b)*	XDim, YDim, NBandDim	UINT8	n/a	y=(BRFModParam3***Scale BRFModParam3**) + **Offset BRFModParam3**	253 = fill 254 = underflow 255 = overflow
BRFModFitResid BRF model fit residuals *(ATB eq. 89a)*	XDim, YDim, NBandDim	UINT16	n/a	y=(BRFModFitResid* **Scale BRFModFitResid**) + **Offset BRFModFitResid**	65533 = fill 65534 = underflow 65535 = overflow
NDVI Normalized Difference Vegetation Index *(ATB eq. 101)*	XDim, YDim	UINT8	n/a	y=(NDVI***Scale NDVI**) + **Offset NDVI**	253 = fill 254 = underflow 255 = overflow
BiomeBestEstimate Best estimate of biome type *(ATB sec. 3.3.6.1)*	XDim, YDim	UINT8	n/a	n/a	253 = fill 1 = Grasses and cereal crops 2 = Shrubland 3 = Broadleaf crops 4 = Savanna 5 = Broadleaf forest 6 = Needleleaf forest 7 = Unknown 8 = Ambiguous 9 = Not land 10 = Barren
BiomeBestEstimateQA QA indicator for best estimate of biome type *(not yet computed; currently set to fill everywhere)*	XDim, YDim	UINT8	n/a	n/a	253 = fill
LAIBestEstimate Best estimate of LAI, equal to **LAIMean2** for **BiomeBestEstimate** *(ATB sec. 3.3.7.4)*	XDim, YDim	FLOAT32	n/a	n/a	-9999 = fill
LAIBestEstimateQA QA indicator for best estimate of	XDim, YDim	UINT8	n/a	n/a	253 = fill 0 = LAI tests 1 and 2

LAI *(ATB sec. 3.3.6.1)*					passed 1 = LAI test 1 passed, LAI test 2 failed 2 = LAI test 1 failed, LAI test 2 passed *(not used)* 3 = LAI test 1 failed, LAI test 2 not attempted 4 = LAI tests not attempted due to poor solar, viewing geometry
FPARBestEstimate Best estimate of FPAR *(ATB eq. 144)*	XDim, YDim	FLOAT32	n/a	n/a	-9999 = fill
BHRPAR BHR in the photosynthetically active radiation (PAR) regime, 400 - 700 nm *(ATB eq. 98)*	XDim, YDim	FLOAT32	n/a	n/a	-9999 = fill
DHRPAR DHR in the photosynthetically active radiation (PAR) regime, 400 - 700 nm *(ATB eq. 100)*	XDim, YDim	FLOAT32	n/a	n/a	-9999 = fill
LAIMean1 Mean LAI, first test (6 biomes) *(ATB eq. 119)*	XDim, YDim, NFparSfcTypeVegDim	UINT8	n/a	y=(LAIMean1* **Scale LAIMean1**)+ **Offset LAIMean1**	253 = fill 254 = underflow 255 = overflow
LAIDelta1 Delta LAI, first test (6 biomes) *(ATB eq. 120)* *(ATB sec. 3.3.6.2)*	XDim, YDim, NFparSfcTypeVegDim	FLOAT32	n/a	Remove sign. y=abs(**LAIDelta1**)	-9999 = fill The sign is a flag indicating if a saturation condition is encountered. Negative values indicate saturation. Positive values indicate no saturation.
LAINumGoodFit1 Number of good fits after first test (6 biomes) *(ATB eq. 118)*	XDim, YDim, NFparSfcTypeVegDim	UINT8	n/a	n/a	253 = fill
LAIMean2 Mean LAI, second test (6 biomes) *(ATB eq. 125)*	XDim, YDim, NFparSfcTypeVegDim	UINT8	n/a	y=(LAIMean2* **Scale LAIMean2**)+ **Offset LAIMean2**	253 = fill 254 = underflow 255 = overflow
LAIDelta2 Delta LAI, second test (6 biomes) *(ATB eq. 126)*	XDim, YDim, NFparSfcT	FLOAT32	n/a	Remove sign. y=abs(LAIDelta2)	-9999 = fill The sign is a flag indicating if a

(ATB sec. 3.3.6.2)	ypeVeg Dim				saturation condition is encountered. Negative values indicate saturation. Positive values indicate no saturation.
LAINumGoodFit2 Number of good fits after second test (6 biomes) *(ATB eq. 124)*	XDim, YDim, NFparSfcTypeVeg Dim	UINT8	n/a	n/a	253 = fill
LAIQA QA indicator for LAI *(ATB sec. 3.3.6.1)*	XDim, YDim, NFparSfcTypeVeg Dim	UINT8	n/a	n/a	253 = fill 0 = LAI tests 1 and 2 passed 1 = LAI test 1 passed, LAI test 2 failed 2 = LAI test 1 failed, LAI test 2 passed *(not used)* 3 = LAI test 1 failed, LAI test 2 not attempted 4 = LAI tests not attempted due to poor solar, viewing geometry
SubrVar Subregion variability *(ATB eq. 1)*	XDim, YDim, NBandDim	UINT8	n/a	y=(SubrVar* **Scale SubrVar**)+ **Offset SubrVar**	253 = fill 254 = underflow 255 = overflow
Grid RegParamsLnd (Spatial Resolution: 17.6 km x 17.6 km, XDim = 8, YDim = 32)					
NormBlkSfcIrrad Normalized black surface irradiance *(ATB eq. 61)*	XDim, YDim, NBandDim	FLOAT32	n/a	n/a	-9999 = fill
NormBlkSfcIrradUnc Normalized black surface irradiance uncertainty *(ATB eq. 62)*	XDim, YDim, NBandDim	FLOAT32	n/a	n/a	-9999 = fill
BOABihemAlb Bottom of atmosphere (BOA) bihemispherical albedo for isotropic incident radiation *(s_1 in ATB eq. 47)*	XDim, YDim, NBandDim	FLOAT32	n/a	n/a	-9999 = fill
BOABihemAlbUnc BOA bihemispherical albedo uncertainty *(ATB eq. 62)*	XDim, YDim, NBandDim	FLOAT32	n/a	n/a	-9999 = fill
RegSfcRetrOptDepth Aerosol optical depth to be used in the land surface retrieval *(aerosol ATB sec. 3.5.7.2)*	XDim, YDim	FLOAT32	n/a	n/a	-9999 = fill
RegSfcRetrOptDepthUnc	XDim,	FLOAT32	n/a	n/a	-9999 = fill

Uncertainty in aerosol optical depth to be used in the land surface retrieval *(NOT YET IMPLEMENTED - CURRENTLY SET TO FILL VALUE OR ZERO)* *(ATB sec. 3.5.7.2)*	YDim				
RegSfcRetrMixture Aerosol mixture to be used in the land surface retrieval *(aerosol ATB 3sec. 3.5.7.2)*	XDim, YDim	UINT8	n/a	n/a	253 = fill 252 = surface retrieval used an aggregate of all successful mixtures; see **AerRetrSuccFlagPerMixture** for the successful mixtures
RegSfcRetrAlgTypeFlag Algorithm type used to compute aerosol mixture and optical depth *(aerosol ATB 3.5.7.2)*	XDim, YDim	UINT8	n/a	n/a	0 = no retrieval 1 = dark water retrieval *2 = OTA (optically thick atmosphere) retrieval (NO LONGER USED)* 3 = heterogeneous surface retrieval 4 = no successful retrieval; optical depth from ”low optical depth” default 5 = no successful retrieval; optical depth from “optical depth in previous region” default *6 = no successful retrieval; optical depth from “Rayleigh scattering only” default (NO LONGER USED)* 7 = no successful retrieval; optical depth from “optical depth upper bound algorithm” default 8 = homogeneous surface retrieval 253 = fill
LandQA Quality indicator for land surface retrievals.	XDim, YDim	UINT8	n/a	n/a	0 = good 1 = bad 253 = fill
SolZenAng Solar zenith angle	XDim, YDim	FLOAT32	degrees	n/a	-9999 = fill

(aerosol ATB sec. 3.2.1.4)					
ViewZenAng View zenith angle (9 cameras) *(aerosol ATB sec. 3.2.1.4)*	XDim, YDim, NCamDim	FLOAT32	degrees	n/a	-9999 = fill
RelViewCamAziAng Relative view-Sun azimuth (9 cameras) *(aerosol ATB sec. 3.2.1.4)*	XDim, YDim, NCamDim	FLOAT32	degrees	n/a	-9999 = fill
ScatterAng Scattering angle (9 cameras) *(aerosol ATB eq. 11)*	XDim, YDim, NCamDim	FLOAT32	degrees	n/a	-9999 = fill
GlitterAng Glitter angle (9 cameras) *(Level 2 Ancillary ATB eq. 37)*	XDim, YDim, NCamDim	FLOAT32	degrees	n/a	-9999 = fill

8.6.8 Per-grid QA Metadata

Table 8-22: Per-grid QA Metadata for Land Surface Products.

Data Field Name	Data Type	Field Dimensions	Valid Range
Swath-level Constructs			
NSubLandAlgProcSw Number of subregions processed with the land surface algorithms.	INT32	--	0-9,306,112
NSubSuccHdrfBhrSw Number of subregions with a successful HDRF/BHR retrieval.	INT32	NBandDim	0-9,306,112
NSubSuccBrfDhrSw Number of subregions with a successful BRF/DHR model parameter retrieval.	INT32	NBandDim	0-9,306,112
NSubSuccBiomeLaiSw Number of subregions with a successful LAI (leaf area index) retrieval.	INT32	--	0-9,306,112
NRegWAnyGoodLndSub Number of regions containing at least one good (non-fill) land subregion.	INT32	--	0-36,352
NRegLandAlgProcSw Number of regions processed with the land surface algorithms.	INT32	--	0-36,352
NSubSuccPARIntBhrSw Number of subregions with a successful PAR-integrated BHR retrieval.	INT32	--	0-9,306,112
NSubSuccPARIntDhrSw Number of subregions with a successful PAR-integrated DHR retrieval.	INT32	--	0-9,306,112
NSubSuccFPARSw Number of subregions with a successful FPAR retrieval.	INT32	--	0-9,306,112
Block-level Constructs			
BlockNumber Block number.	INT32	--	1-180
ValidRecord Indicates if valid data are present for the block.	UINT8	--	0,1

NRegWAnyGoodLndSub Number of regions containing at least one good (non-fill) land subregion.	INT32	--	0-256
NSubWGoodLndData Number of subregions containing good (non-fill) land data.	INT32	--	0-65,536
NSubLandAlgProc Number of subregions processed with the land surface algorithms.	INT32	--	0-65,536
NSubSuccHdrfBhr Number of subregions with a successful HDRF/BHR retrieval.	INT32	NBandDim	0-65,536
NSubSuccBrfDhr Number of subregions with a successful BRF/DHR/BRF model parameter retrieval.	INT32	NBandDim	0-65,536
NSubSuccBiomeLai Number of subregions with a successful LAI (leaf area index) retrieval.	INT32	--	0-65,536
NSubClBarren Number of subregions with a biome classification of Barren.	INT32	--	0-65,536
NSubClWater Number of subregions with a biome classification of Water.	INT32	--	0-65,536
NSubClGrassCerCrop Number of subregions with a biome classification of Grasses and Cereal Crops.	INT32	--	0-65,536
NSubClSemiAridShrb Number of subregions with a biome classification of Semi-arid Shrubland.	INT32	--	0-65,536
NSubClBroadlfCrop Number of subregions with a biome classification of Broadleaf Crop.	INT32	--	0-65,536
NSubClSavanna Number of subregions with a biome classification of Savanna.	INT32	--	0-65,536
NSubClBroadlfFor Number of subregions with a biome classification of Broadleaf Forest.	INT32	--	0-65,536
NSubClNeedlelfFor Number of subregions with a biome classification of Needleleaf Forest.	INT32	--	0-65,536
NSubClUnknown Number of subregions with a biome classification of Unknown.	INT32	--	0-65,536
NRegLandAlgProc Number of regions processed with the land surface algorithms.	INT32	--	0-256
NSubSuccPARIntBhr Number of subregions with a successful PAR-integrated BHR retrieval.	INT32	--	0-65,536
NSubSuccPARIntDhr Number of subregions with a successful PAR-integrated DHR retrieval.	INT32	--	0-65,536
NSubSuccFPAR Number of subregions with a successful FPAR retrieval.	INT32	--	0-65,536
GeomDataQualInd Geometric calibration data quality indicator.	FLOAT64	--	-1 to 1

8.7 MISR LEVEL 2 MIL2ASOS OCEAN SURFACE PRODUCT

8.7.1 File Metadata Description

Table 8-23: File Metadata for Ocean Surface Product Files

File Metadata Field Name	Definition	Data Type	Units	Valid Range
Path_number	Orbit path number	INT32	N/A	1-233
AGP_version_id	Version identifier for AGP	INT32	N/A	2
DID_version_id	Version identifier for DID (DTED [Digital Terrain Elevation Dataset] Intermediate Dataset)	INT32	N/A	4
Number_blocks	Total number of blocks	INT32	N/A	1-180
Ocean_blocks_size	Ocean_blocks.number dimension	INT32	N/A	1-180
Ocean_blocks.count	Total number of blocks containing entirely ocean radiances	INT32	N/A	1-180
Ocean_blocks.numbers	List of block numbers containing entirely ocean radiances	INT32	N/A	1-180
SOM_parameters.som_ellipsoid.a	Semimajor axis of ellipsoid	FLOAT64	meters	WGS84 ellipsoid (6.3781370E+ 06)
SOM_parameters.som_ellipsoid.e2	Eccentricity of ellipsoid squared	FLOAT64	N/A	WGS84 ellipsoid (6.6943480E-03)
SOM_parameters.som_orbit.aprime	Semimajor axis of orbit	FLOAT64	meters	Not used.
SOM_parameters.som_orbit.eprime	Eccentricity of orbit	FLOAT64	N/A	Not used.
SOM_parameters.som_orbit.gamma	Longitude of perigee	FLOAT64	radians	Not used.
SOM_parameters.som_orbit.nrev	Number of revolutions per ground track repeat cycle	INT32	N/A	233
SOM_parameters.som_orbit.ro	Radius of circular orbit	FLOAT64	meters	7.0780408E+0 6
SOM_parameters.som_orbit.i	Inclination of orbit (degrees)	FLOAT64	radians	1.7157253
SOM_parameters.som_orbit.P2P1	Ratio of time of revolution over length of Earth rotation/orbit	FLOAT64	N/A	6.8666667E-02
SOM_parameters.som_orbit.lambda0	Geodetic longitude of ascending node at time 0 (degrees)	FLOAT64	radians	-2π to 2π
Origin_block.ulc.x	SOM X coordinate (in meters) of the upper left corner of the first block	FLOAT64	meters	6 million to 33 million
Origin_block.ulc.y	SOM Y coordinate (in meters) of the upper left corner of the first block	FLOAT64	meters	+/- 12 million
Origin_block.lrc.x	SOM X coordinate (in meters) of the lower	FLOAT64	meters	6 million to 33

	right corner of the first block			million
Origin_block.lrc.y	SOM Y coordinate (in meters) of the lower right corner of the first block	FLOAT64	meters	+/- 12 million
Start_block	The block number in the AGP which corresponds to the first block in this file containing data.	INT32	N/A	1 - 180 Start_block < End block
End block	The block number in the AGP which corresponds to the last block in this file containing data.	INT32	N/A	1 - 180 Start_block < End block
Cam_mode	Indicates whether the data in this grid file was obtained in MISR global mode or local mode.	INT32	N/A	0-1 1 = global 0 = local
Num_local_modes	The number of MISR local mode acquisitions contained in this file.	INT32	N/A	0-6 0 if data is global mode
Local_mode_site_name	The geographical name of the first local mode site contained in this file.	CHAR8	N/A	string up to 12 characters in length, including null
Orbit_QA	Indication of the overall quality of the orbit data based on analysis of quality flags in the spacecraft attitude and ephemeris data. Geolocation accuracy may be impaired for orbits with poor quality orbit data.	FLOAT32	N/A	-9999.0 = NoRetrieval, -1.0 = Poor, 0.0 = Nominal

8.7.2 Per-grid Metadata Description

Table 8-24: Per-grid Metadata for Ocean Surface Product Files

Common Grid Metadata	Definition	Data Type	Valid Values
Block_size.resolution_x	Resolution of block x dimension in meters	INT32	1100, 17600
Block_size.resolution_y	Resolution of block y dimension in meters	INT32	1100, 17600
Block_size.size_x	Block x dimension	INT32	128, 8
Block_size.size_y	Block y dimension	INT32	512, 32

8.7.3 Per-block Metadata Description

Table 8-25: Per-block Metadata for Ocean Surface Product Files

PerBlockMetadataCommon	Definition	Data Type	Valid Values
Block_number	Current block number	INT32	1-180
Ocean_flag	Flag signalling whether the block contains entirely ocean radiances	INT8	0 = block has no ocean or is a mix of ocean and land

			1 = block is entirely ocean
Block_coor_ulc_som_meter.x	Upper left corner SOM block x coordinate in meters	FLOAT64	
Block_coor_ulc_som_meter.y	Upper left corner SOM block y coordinate in meters	FLOAT64	
Block_coor_lrc_som_meter.x	Lower right corner SOM block x coordinate in meters	FLOAT64	
Block_coor_lrc_som_meter.y	Lower right corner SOM block y coordinate in meters	FLOAT64	
Data_flag	Flag signalling whether the block contains entirely fill data	INT8	0 = block contains entirely fill data 1 = block contains valid data

Common Per Block Metadata	Definition	Data Type	Valid Values
Geometric DQI	Geometric Data Quality Indicator copied from the L1B2 Terrainprojected parameter file.	FLOAT64	-1 to 1

PerBlockMetadataTime	Definition	Data Type	Valid Values
BlockCenterTime	TAI time of the lower right pixel of the center four pixels in the current block, converted to UTC time, and displayed in CCSDS ASCII time code A format. Note: BlockCenterTime may be incorrect for the first and last blocks processed in a swath.	CHAR8 * 28	

8.7.4 Per-line Metadata Description

None.

8.7.5 Per-pixel Metadata Description

None.

8.7.6 Grid Data Set Descriptions

In order to minimize storage for the Aerosol/Surface Product, some parameters will be packed so that each bit represents a logical value, or some number of bits within a byte or word represent a flag value. To facilitate the interpretation of scientific data, floating point values are not scaled. Floating

point values and integer values may take on a flag value indicating invalid data. Currently, there is a flag value of -9999.0, representing missing floating point data; a flag value of 253, representing missing data for unsigned 8-bit integers; a flag value of 65533, representing missing data for unsigned 16-bit integers; and a flag value of -32768, representing missing data for 16-bit signed integers. In addition, there are flag values representing underflow and overflow. There is a flag value of 254, representing underflow for unsigned 8-bit integers; a flag value of 255, representing overflow for unsigned 8-bit integers; a flag value of 65534, representing underflow for unsigned 16-bit integers; a flag value of 65535, representing overflow for unsigned 16-bit integers; a flag value of -32767, representing underflow for 16-bit signed integers; and a flag value of 32767, representing overflow for 16-bit signed integers. Note that we may later add more flag values to distinguish other reasons that the data are missing (e.g. never computed, arithmetic error, etc.).

Table 8-26: Ocean Surface Product Field Dimension Descriptions

Dimension	**Description**	**Valid Values**
SOMBlockDim	*SOMBlockDim* is the number of SOM blocks in the file. The slowest-varying dimension is implicitly the SOM block dimension. It is not shown in the tables below.	- for the Aerosol and Land Surface files this can vary, with a typical value being approximately 140 - for the Ocean Surface file this will be 6
XDim	*XDim* is the number of lines in a block. The x dimension direction is identical to the standard SOM x dimension.	128 for 1.1 km parameters or 8 for 17.6 km parameters
YDim	*YDim* is the number of samples in a block. The y dimension direction is identical to the standard SOM y dimension.	512 for 1.1 km parameters or 32 for 17.6 km parameters
NTOACModelIdDim	NTOACModelIdDim is the number of TOAC model identifiers.	2

Table 8-27: Ocean Surface Product Grid Dataset Descriptions

Field Name Parameter Description	Dimension List	Number Type	Units	Transform ation	Flag Values
Grid SubregParamsOcn (Spatial Resolution: 1.1 km x 1.1 km, XDim = 128, YDim = 512)					
WaterLeavEqReflConv Water-leaving equivalent reflectance (conventional)	XDim, YDim	FLOAT32	n/a	n/a	-9999 = fill
WaterLeavEqReflExp Water-leaving equivalent reflectance (experimental)	XDim, YDim	FLOAT32	n/a	n/a	-9999 = fill
WaterLeavEqReflUnc Uncertainty in water-leaving equivalent reflectance (experimental)	XDim, YDim	FLOAT32	n/a	n/a	-9999 = fill
TOACAerModelId TOAC model identifiers (2)	XDim, YDim, NTOACModelIdDim	UINT8	n/a	n/a	253 = fill
TOACAerOptDepth	XDim, YDim	FLOAT32	n/a	n/a	-9999 = fill

865 nm aerosol optical depth					
PhytoPigmConcConv Phytoplankton pigment concentration (conventional)	XDim, YDim	FLOAT32	mg m^{-3}	n/a	-9999 = fill
PhytoPigmConcExp Phytoplankton pigment concentration (experimental)	XDim, YDim	FLOAT32	mg m^{-3}	n/a	-9999 = fill
PhytoPigmConcUnc Uncertainty in phytoplankton pigment concentration (experimental)	XDim, YDim	FLOAT32	mg m^{-3}	n/a	-9999 = fill
DkWaterFlag Dark water flag	XDim, YDim	UINT8	n/a	n/a	0 = Is not a dark water region 1 = Is a dark water region 0 = fill
Grid RegParamsOcn (Spatial Resolution: 17.6 km x 17.6 km, XDim = 8, YDim = 32)					
GlitterWhiteEqReflAvg Average value of glitter + whitecap equivalent reflectance	XDim, YDim	FLOAT32	n/a	n/a	-9999 = fill
OceanColorCam Camera used in ocean color retrieval	XDim, YDim	UINT8	n/a	n/a	253 = fill

8.7.7 Per-grid QA Metadata

Table 8-28: Per-grid QA Metadata for Ocean Surface Products

Data Field Name	Data Type	Field Dimension	Valid Range
Swath-level			
NRegWAnyGoodOcnSub	INT32	--	0-36,352
Block-level Constructs			
BlockNumber Block number.	INT32	--	1-180
ValidRecord Indicates if valid data are present for the block.	UINT8	--	0,1
NRegWAnyGoodOcnSub Number of regions containing at least one good (non-fill) ocean subregion.	INT32	--	0-256
NSubWGoodOcnData Number of subregions containing good (non-fill) ocean data.	INT32	--	0-65,536
NSubOceanAlgProc Number of subregions processed with the ocean surface algorithms.	INT32	--	0-65,536
NSubSuccOcnAlgConv Number of subregions with a successful ocean retrieval using the conventional algorithm.	INT32	--	0-65,536
NSubSuccOcnAlgExp Number of subregions with a successful ocean retrieval using the	INT32	--	0-65,536

experimental algorithm.			
NRegOceanAlgProc Number of regions processed with the ocean surface algorithms.	INT32	--	0-256
GeomDataQualInd Geometric calibration data quality indicator.	FLOAT64	--	-1 to 1

9 MISR ANCILLARY PRODUCTS

9.1 MISR ANCILLARY PRODUCT GRANULE NAMES

MISR Ancillary Products are composed of the eight granules listed below (Table 9-1).

Table 9-1: MISR Ancillary File Granule Names

MISR ANCILLARY FILE GRANULE NAME	ESDT Name	Section
MISR_AM1_AGP_Pmmm_vv.hdf	MIANCAGP	9.4
MISR_AM1_ARP_PRFLTCHAR_Fmm_vvv.hdf	MIANCARP	9.5
MISR_AM1_ARP_PRFLTCAL_Fmm_vvv.hdf	MIANCARP	9.6
MISR_AM1_ARP_INFLTCAL_Tmmm_Fmm_vvv.hdf	MIANCARP	9.7
MISR_AM1_ARP_CONFIG_Fmm_vvv.hdf	MIANCARP	9.8
MISR_AM1_ACP_APOP_Fmm_vvvv.hdf	MIANCACP	9.9
MISR_AM1_ACP_MIXTURE_Fmm_vvvv.hdf	MIANCACP	9.10
MISR_AM1_ACP_CLIMLIKE_Fmm_vvvv.hdf MISR_AM1_TASC_mmm_yyyy_Fmm_vv.hdf	MIANCACP MIANTASC	9.11

9.2 MISR ANCILLARY PRODUCT GRANULE BRIEF DESCRIPTIONS

9.2.1 MISR Ancillary MIANCAGP Geographic Product

The Ancillary Geographic Product (AGP) is essentially a global database of geographic properties, tailored to the needs of the MISR mission. The AGP is utilized in the creation of all MISR Level 1B2 and Level 2 products throughout the mission and is required for the interpretation of those products.

The parameters in this product are reported in a Space-Oblique Mercator (SOM) map projection. The map resolution of the projection is 1.1 km; this defines the horizontal sampling for most of the parameters. The horizontal datum, or surface-basis, for the projection is the WGS84 ellipsoid. This map projection and surface-basis is identical to what will be used for all the Level 1B2 and Level 2 parameters.

The AGP consists of 233 files, corresponding to the 233 repeat orbits of the EOS AM-1 spacecraft. The length and width covered by the AGP needs to be large enough to contain the maximum overlap width of the swath seen by all nine MISR camera views. This width varies per latitude to a minimum near the poles and a maximum of 378 km near the equator. The length of the AGP covers the maximal starting and ending points of the MISR instrument mapping of the surface. Since a mapping swath runs from terminator to terminator for every orbit, the AGP must run from the terminator of the summer solstice at the north end of the orbit and the terminator of the winter solstice at the south

end.

9.2.2 MISR Ancillary MIANCARP Pre-Flight Characterization Product

The Ancillary Radiometric Product (ARP) contains coefficients and data variables which are used in the Level 1B1 and Level 2 processing. There are four files associated with this product: the preflight instrument characterization file, which is not expected to change much over time; the preflight calibration data file; the in-flight calibration data; and the configuration parameters.

The Characterization file contains preflight instrument characterization parameters, supplied for data user reference. Examples include the measured spectral response functions, and the instantaneous fields-of-view. These parameters are not used by the DAAC processes. It is unlikely that this file will be modified once delivered.

9.2.3 MISR Ancillary MIANCARP Pre-Flight Calibration Product

The Pre-Flight Calibration file contains preflight calibration data. It is distinguished from the Pre-flight Instrument Characterization Data, in that these data are used as input to the DAAC processing. Parameters include spectral descriptors relevant to Level 1B1 and Level 2 standard products, and band weighted solar irradiances. Radiometric gain coefficients are not included in this file, as they are updated on-orbit. It is unlikely that this file will be modified once delivered.

9.2.4 MISR Ancillary MIANCARP In-Flight Calibration Product

The In-Flight Calibration file contains the in-flight calibration data. It is also used as input to the DAAC standard processing. It is distinguished from the Pre-flight Calibration Data, in that these instrument parameters are monitored on-orbit. At-launch values are initialized by the Pre-flight Calibration Data. Bi-monthly updates to this file allow processing to continue with current performance metrics. Parameters include radiometric calibration coefficients, calibration uncertainties, signal-to-noise ratios, and detector data quality indicators. A version number tracks file format changes; a date range revision number indicates a revision has been made to the parameters.

9.2.5 MISR Ancillary MIANCARP Configuration Product

The Configuration file contains threshold parameters and process control limits used in the DAAC processing. An example is the average digital number (DN) value of a line above which data integrity is reduced. These parameters will change only at the discretion of the Principal Investigator, Instrument Scientist, and Science Team. Such a change would reflect a relaxation or stricter tolerance of specific data anomalies. A version number will reflect any such changes.

9.2.6 MISR Ancillary MIANCACP APOP Product

The Aerosol Physical and Optical Properties (APOP) file is part of the Aerosol Climatology Product (ACP). This file contains the microphysical and scattering characteristics of pure aerosol models upon which the routine retrievals are based. The physical properties (size distribution, index of

refraction, and tendency to adsorb water) are based upon current knowledge. The effective optical properties are calculated using Mie theory for spherical particles, and ellipsoid approximations/geometric optics for non-spherical cases, for a range of relative humidities. Size statistics and indices of refraction are calculated, and optical properties are reported for all MISR bands.

9.2.7 MISR Ancillary MIANCACP Aerosol Mixture Product

The Aerosol Mixture file is part of the Aerosol Climatology Product (ACP). This file defines the mixtures of pure aerosols that will be compared to MISR observations. The mixtures are defined for each of the retrieval pathways that may occur during aerosol retrievals for each region of the globe. These include dark water surface, and heterogeneous land surface.

9.2.8 MISR Ancillary MIANCACP Climatological Likelihood Product

The Aerosol Clim-Likely file is part of the Aerosol Climatology Product (ACP). This file contains climatological likelihood values for each candidate aerosol model.[10]

9.2.9 MISR Terrestrial Atmosphere and Surface Climatology Product

The Terrestrial Atmosphere and Surface Climatology Product (TASC) contains a number of climatological measurements that used in the Level 2 and Level 3 processing such as the surface wind speeds and the snow-ice masks.

Except for these two datasets, the rest of the fields in the TASC dataset are static and do not change over time. However, the ocean-surface wind speeds are derived from QuikScat (version F02_03 of the dataset) or SSM/I (version F02_04) data, and the snow-ice masks are derived from NSIDC data. Both of these fields are updated on a monthly basis, therefore a new version of the TASC is delivered every month. These TASC changes, along with the RCCM Threshold updates, are the reason for the existence of the Firstlook/Final processing scheme.

9.3 MISR ANCILLARY PRODUCT GRANULE DATA SETS

9.3.1 MISR Ancillary MIANCAGP Geographic Product

The product will be produced as one ESDT, with 233 physical files, as described above. Each physical file is in the HDF-EOS Grid “stacked-block” format and each contains one or more HDF-EOS Grid datasets, corresponding to parameters at certain spatial resolutions. The grid datasets have the usual x and y dimensions, as well as a third dimension corresponding to the SOM block number. The x and y dimensions correspond to the the number of samples in the along-track and cross-track directions. The blocks that make up the Level 1B2 Georectfied Radiance Product files and all of the Level 2 product files are a direct subset of the blocks that make up the Ancillary Geographic Product.

10 This file does not yet exist, and its format has not been defined.

9.3.2 MISR Ancillary MIANCARP Pre-Flight Characterization Product

One HDF file and data set.

9.3.3 MISR Ancillary MIANCARP Pre-Flight Calibration Product

One HDF file and data set.

9.3.4 MISR Ancillary MIANCARP In-Flight Calibration Product

One HDF file and data set.

9.3.5 MISR Ancillary MIANCARP Configuration Product

One HDF file and data set.

9.3.6 MISR Ancillary MIANCACP APOP Product

One HDF file and data set.

9.3.7 MISR Ancillary MIANCACP MIXTURE Product

One HDF file and data set.

9.3.8 MISR Ancillary MIANCACP CLIMLIKELY Product

TBD.

9.3.9 MISR Terrestrial Atmosphere and Surface Climatology Product

One HDF file and data set per month. The file is in HDF-EOS Grid format (not Stacked Block like the L1, L2 and AGP data, but a regular latitude/longitude grid similar to L3), where the upper-left corner of the grid is located at (90.0 North, 180.0 West) and the lower-right corner of the grid is located at (90.0 South, 180.0 East). The resolution of the dataset is 1.0 x 1.0 degrees.

Table 9-2: Ancillary Product Files and Grid Datasets

ESDT Shortname	Local Granule ID[11,2]	Grid Dataset Name
MIANCAGP	MISR_AM1_AGP_Pnnn_Fmm_vv.hdf	Standard

11 Pnnn corresponds to the orbit path, Fmm corresponds to the file format version number, and vv[vv] is the file version number.

2 This footnote only applies to the TASC dataset. mmm stands for the 3-letter abbreviation of the month, yyyy is the year, Fmm is the format version number, and vv is the file version number.

		Regional
MIANCARP	MISR_AM1_ARP_PRFLTCHAR_Fmm_vvv.hdf	N/A
MIANCARP	MISR_AM1_ARP_PRFLTCAL_Fmm_vvv.hdf	N/A
MIANCARP	MISR_AM1_ARP_INFLTCAL_Tmmm_Fmm_vvv.hdf	N/A
MIANCARP	MISR_AM1_ARP_CONFIG_Fmm_vvv.hdf	N/A
MIANCACP	MISR_AM1_ACP_APOP_Fmm_vvvv.hdf	N/A
MIANCACP	MISR_AM1_ACP_MIXTURE_Fmm_vvvv.hdf	N/A
MIANCACP	MISR_AM1_ACP_CLIMLIKE_Fmm_vvvv.hdf	N/A
MIANTASC	MISR_AM1_TASC_mmm_yyyy_Fmm_vv.hdf	TASCParams

9.4 MISR ANCILLARY MIANCAGP GEOGRAPHIC PRODUCT

9.4.1 File Metadata Description

Table 9-3: File Metadata for Ancillary Geographic Product Files

File Metadata Field Name	Definition	Data Type	Units	Valid Range/ Value
Path_number	Orbit path number	INT32	N/A	1-233
AGP_version_id	Version Identifier for Ancillary Geographic Product	INT32	N/A	2
DID_version_id	Version Identifier for DID (DTED [Digital Terrain Elevation Dataset] Intermediate Dataset)	INT32	N/A	4
Number_blocks	Total number of blocks	INT32	N/A	1-180
Ocean_blocks_size	Ocean_blocks.number dimension	INT32	N/A	1-180
Ocean_blocks.count	Total number of blocks containing entirely ocean radiances	INT32	N/A	1-180
Ocean_blocks.numbers	List of block numbers containing entirely ocean radiances	INT32	N/A	1-180
SOM_parameters.som_ellipsoid.a	Semimajor axis of ellipsoid	FLOAT64	meters	WGS84
SOM_parameters.som_ellipsoid.e2	Eccentricity of ellipsoid squared	FLOAT64	N/A	WGS84
SOM_parameters.som_orbit.aprime	Semimajor axis of orbit	FLOAT64	meters	Not Used
SOM_parameters.som_orbit.eprime	Eccentricity of orbit	FLOAT64	N/A	Not Used
SOM_parameters.som_orbit.gama	Longitude of perigee	FLOAT64	radians	Not Used
SOM_parameters.som_orbit.nrev	Number of revolutions	INT32	N/A	233
SOM_parameters.som_orbit.ro	Radius of circular orbit	FLOAT64	meters	7078040.8
SOM_parameters.som_	Inclination of orbit	FLOAT64	radians	1.7157253

orbit.i				
SOM_parameters.som_orbit.P2P1	Ratio of time of revolution over length of Earth rotation/orbit	FLOAT64	N/A	0.0068666667
SOM_parameters.som_orbit.lambda0	Geodetic longitude of ascending node at time 0	FLOAT64	radians	0 - 2Π
Origin_block.ulc.x	SOM X coordinate (in meters) of the upper left corner of the first block	FLOAT64	meters	6 million to 33 million
Origin_block.ulc.y	SOM Y coordinate (in meters) of the upper left corner of the first block	FLOAT64	meters	+/- 12 million
Origin_block.lrc.x	SOM X coordinate (in meters) of the lower right corner of the first block	FLOAT64	meters	6 million to 33 million
Origin_block.lrc.y	SOM Y coordinate (in meters) of the lower right corner of the first block	FLOAT64	meters	+/- 12 million
Start_block	The block number in the AGP which corresponds to the first block in this file containing data.	INT32	N/A	1 - 180 Start_block < End block
End block	The block number in the AGP which corresponds to the last block in this file containing data.	INT32	N/A	1 - 180 Start_block < End block

9.4.2 Per-grid Metadata Description

Table 9-4: Per-grid Metadata for Ancillary Geographic Product Files

Common Grid Metadata	Definition	Data Type	Valid Values
Block_size.resolution_x	Resolution of block x dimension in meters	INT32	1100
Block_size.resolution_y	Resolution of block y dimension in meters	INT32	1100
Block_size.size_x	Block x dimension	INT32	128
Block_size.size_y	Block y dimension	INT32	512

9.4.3 Per-block Metadata Description

Table 9-5: Per-block Metadata for Ancillary Geographic Product Files

PerBlockMetadataCommon	Definition	Data Type	Valid Range
Block_number	Block number	INT32	1-180
Ocean_flag	Flag signalling whether the block contains entirely ocean radiances	INT8	0 = block has no ocean or is a mix of ocean and land 1 = block is entirely ocean
Block_coor_ulc_som_meter.x	Upper left corner SOM block x coordinate in meters	FLOAT64	
Block_coor_ulc_som_meter.y	Upper left corner SOM block y coordinate in meters	FLOAT64	

Block_coor_lrc_som_meter.x	Lower right corner SOM block x coordinate in meters	FLOAT64	
Block_coor_lrc_som_meter.y	Lower right corner SOM block y coordinate in meters	FLOAT64	
Data_flag	TBD	INT8	1 = Contains Data 0 = Not Valid

PerBlockMetadataAGP	Definition	Data Type	Valid Range
Point_elev_offset.x	X coordinate offset to point elevation location in meters	FLOAT64	
Point_elev_offset.y	Y coordinate offset to point elevation location in meters	FLOAT64	
ULC_latitude	Upper left corner latitude in degrees	FLOAT64	
ULC_longitude	Upper left corner longitude in degrees	FLOAT64	
ULC_som_meter.x	Upper left corner SOM block x coordinate in meters	FLOAT64	
ULC_som_meter.y	Upper left corner SOM block y coordinate in meters	FLOAT64	
ULC_som_pixel.x	Lower right corner SOM block x coordinate in meters	INT32	
ULC_som_pixel.y	Lower right corner SOM block y coordinate in meters	INT32	
Ave_block_elev	Average elevation for entire block	FLOAT64	

9.4.4 Grid Data Set Descriptions

Table 9-6: Ancillary Geographic Product Field Dimension Descriptions

Dimension	Description	Valid Values
SOMBlockDim	*SOMBlockDim* is the number of SOM blocks in the file. The slowest-varying dimension is implicitly the SOM block dimension. It is not shown in the tables below.	180
XDim	*XDim* is the number of lines in a block. The x dimension direction is identical to the standard SOM x dimension.	128 for 1.1 km parameters 8 for 17.6 km parameters
YDim	*YDim* is the number of samples in a block. The y dimension direction is identical to the standard SOM y dimension.	512 for 1.1 km parameters 32 for 17.6 km parameters

Table 9-7: Ancillary Geographic Product Grid Dataset Descriptions

Field Name Parameter Description	Dimension List	Number Type	Units	Flag Values or Valid Range
Grid Standard (Spatial Resolution: 1.1 km x 1.1 km, XDim = 128, YDim = 512				
AveSceneElev	XDim, YDim	INT16	meters	

Average Scene Elevation				
StdDevSceneElev Standard Deviation of Scene Elevation	XDim, YDim	INT16	meters	
StdDevSceneElevRelSlp Standared Devation of Scene Elevation Relative to Mean Slope	XDim, YDim	UINT16	n/a	
PtElev Point Elevation on the 275 m grid.	XDim, YDim	INT16	meters	This field was used during photogrammetric calibration. It is not recommend for use by the general public.
GeoLatitude Geographic Latitude	XDim, YDim	FLOAT32	degrees	
GeoLongitude Geographic Longitude	XDim, YDim	FLOAT32	degrees	
SurfaceFeatureID Surface Feature Identifiers	XDim, YDim	UINT8	n/a	0 = Shallow Ocean 1 = Land 2 = Coastline 3 = Shallow Inland Water 4 = Ephemeral Water 5 = Deep Inland Water 6 = Deep Ocean
AveSurfNormAzAng Average Surface-Normal Azimuth Angle	XDim, YDim	UINT8	degrees scaled to the range 0-255	To obtain degrees in the range 0-360, multiply by (360/256). Convention: 0 degrees = North, 90 degrees = East, etc.
AveSurfNormZenAng Average Surface-Normal Zenith Angle	XDim, YDim	UINT8	degrees scaled to the range 0-255	To obtain degrees in the range 0-90, multiply by (90/256). Convention: 0 degrees = level surface
Grid Regional (Spatial Resolution: 17.6 km x 17.6 km, XDim = 6, YDim = 32				
RegAveSceneElev Regional Average Scene Elevation	XDim, YDim	INT16	meters	
StdDevRegSceneElev Standard Deviation of Regional Average Scene Elevation	XDim, YDim	UINT16	meters	

9.5 MISR ANCILLARY MIANCARP PRFLTCHAR PRODUCT

9.5.1 File Metadata Description

Table 9-8: File Metadata for Ancillary Radiometric Pre-Flight Char Product Files

Name	Type	Description
TITLE	8-bit signed char	Name of the ARP file
DATE	8-bit signed char	Date the file was written

9.5.2 Per-SDS Metadata Description

None.

9.5.3 Per-block Metadata Description

None.

9.5.4 Scientific Data Set Descriptions

The ARP data for each file are all in one Science Data Set (SDS). The global attributes hold all of the metadata. Each element in the SDS follows.

The ARP coefficients are placed into the HDF file in an averaging mode (subscript am), radiometric level (l), camera (c), band (b), and pixel (p) order. The index order is:

- averaging mode: 1x1, 1x4, 2x2, and 4x4;
- radiometric levels: from low to high values (0.001 to 1.0);
- camera order is: Df, Cf, Bf, Af, An, Aa, Ba, Ca, and Da;
- band order: Blue, Green, Red, NIR;
- pixel order is to be from 1 to 1504 for the forward cameras, and from 1504 to 1 for the nadir and aftward-viewing cameras, where this pixel index refers to the original camera clocking output order.

Parameters marked in column R have pixel order reversed for the forward cameras, as compared to the CCD read-out order. In all instances, the Column dimension equals 1.

Table 9-9: ARP: Preflight characterization data.

Parameter name [units]	Dimension List	Number of values	Field name
Version number	Version	1	version_no
Spectral response profiles:			
$R_\lambda(c,b,s,\lambda)$ [none], measured response profiles	Camera Band Pixel Wavelength	9x4x3x 1471	meas_resp
$Z_R(c,b,s)$ [none], measured response profile zones	Camera Band Pixel	9x4x3	meas_resp_zone

$S_\lambda(b,l)$ [none], standardized response profiles	Band Wavelength	4x1471	std_total_resp
$S_\lambda^{in\text{-}band}(b,l)$ [none], in-band standardized response profiles	Band Inband Wavelength	4x200	std_inband_resp
in-band wavelength limits: $\lambda_l^{std}(b)$ [nm], lower limit, and $\lambda_u^{std}(b)$ [nm], upper limit	Band Column Band Column	λ_l^{std}: 4 λ_u^{std}: 4	wave_low_limit wave_high_limit
Gaussian analysis parameters, unweighted:			
$S_g^{in\text{-}band}(b)$ [none], peak response, gaussian fit to the standardized profile	Band Column	4	gauss_inband_peak
$\lambda_g^{std,in\text{-}band}(b)$ [nm], center wavelength, gaussian fit to the standardized profile	Band Column	4	gauss_inband_center_wav
$\Delta\lambda_g^{std,in\text{-}band}(b)$ [nm], bandwidth, gaussian fit to the standardized profile	Band Column	4	gauss_inband_bandwidth
$R_g^{in\text{-}band}(c,b,p)$ [none], peak response, gaussian fit to the measured profile	Camera Band Active pixels	9x4x 1504	meas_inband_peak
$\lambda_g^{meas,in\text{-}band}(c,b,p)$ [nm], center wavelength, gaussian fit to the measured profile	Camera Band Active pixels	9x4x 1504	meas_inband_center_wav
$\Delta\lambda_g^{meas,in\text{-}band}(c,b,p)$ [nm], bandwidth, gaussian fit to the measured profile	Camera Band Active pixels	9x4x 1504	meas_inband_bandwidth
Moments analysis parameters, unweighted:			
$S_m^{std}(b)$ [none], equivalent response, moments analysis of the standardized profile	Band Column	4	std_moments_height
$\lambda_m^{std}(b)$ [nm], center wavelength, moments analysis of the standardized profile	Band Column	4	std_moments_center_wav
$\Delta\lambda_m^{std}(b)$ [nm], bandwidth, moments analysis of the standardized profile	Band Column	4	std_moments_width
$R_m(c,b,p)$ [none], equivalent response, moments analysis of the measured profile	Camera Band Active pixels	9x4x 1504	meas_moments_height
$\lambda_m^{meas}(c,b,p)$ [nm], center wavelength, moments analysis of the measured profile	Camera Band Active pixels	9x4x 1504	meas_moments_center_wav
$\Delta\lambda_m^{meas}(c,b,p)$ [nm], bandwidth, moments analysis of the measured profile	Camera Band Active pixels	9x4x 1504	meas_moments_width
Exo-atmospheric solar irradiance:			
$E_{0\lambda}(\lambda)$ [W m^{-2} μm^{-1}], exo-atmospheric solar irradiance	Wavelength Column	1471	exo_atm_irrad

Solar and measured response weighted parameters:			
E_0^{meas}(c,b,p) [W m-2 μm^{-1}], solar irradiances, measured response weighted	Camera Band Active pixels	9x4x 1504	meas_solar_wgted_height
$\lambda_{m,solar}^{meas}$(c,b,p) [nm], center wavelength, solar and measured response weighted	Camera Band Active pixels	9x4x 1504	meas_solar_wgted_center_wav
$\Delta\lambda_{m,solar}^{meas}$(c,b,p) [nm], bandwidth, solar and measured response weighted	Camera Band Active pixels	9x4x 1504	meas_solar_wgted_width
Instantaneous fields-of-view:			
$IFOV_x$(c,b,s) [μrad], crosstrack instantaneous fields-of-view	Camera Band Zone Pixel	9x4x5	ifov_crosstrk
$IFOV_d$(c,b,s) [μrad], downtrack fields-of-view	Camera Band Zone Pixel	9x4x5	ifov_downtrk
Z_{ifov}(c,b,s) [none], measured IFOV zones	Camera Band Zone Pixel	9x4x5	ifov_zone
Effective focal length:			
EFL(c) [mm], effective focal length	Camera Column	9	efl

9.6 MISR ANCILLARY MIANCARP PRFLTCAL PRODUCT

9.6.1 File Metadata Description

Table 9-10: File Metadata for Ancillary Radiometric PRFLTCAL Product Files

Name	Type	Description
TITLE	8-bit signed char	Name of the ARP file
DATE	8-bit signed char	Date the file was written

9.6.2 Per-SDS Metadata Description

None.

9.6.3 Per-block Metadata Description

None.

9.6.4 Scientific Data Set Descriptions

The ARP data for each file are all in one Science Data Set (SDS). The global attributes hold all of the metadata. Each element in the SDS follows.

The ARP coefficients are placed into the HDF file in an averaging mode (subscript am), radiometric level (l), camera (c), band (b), and pixel (p) order. The index order is:

- averaging mode: 1x1, 1x4, 2x2, and 4x4;
- radiometric levels: from low to high values (0.001 to 1.0);
- camera order is: Df, Cf, Bf, Af, An, Aa, Ba, Ca, and Da;
- band order: Blue, Green, Red, NIR;
- pixel order is to be from 1 to 1504 for the forward cameras, and from 1504 to 1 for the nadir and aftward-viewing cameras, where this pixel index refers to the original camera clocking output order.

Parameter [units]	Dimension List	Number of values	ARP software name
Version number	Version	1	pcd_version_no
Solar and in-band standardized response weighted parameters:			
$E_0^{std,in\text{-}band}(b)$ [W m^{-2} μm^{-1}], solar irradiances, in-band standardized response weighted	Band Column	4	std_inband_solar_wgted_height
$\lambda_{m,solar}^{std,in\text{-}band}(b)$ [nm], center wavelength, solar and in-band standardized response weighted	Band Column	4	std_inband_solar_wgted_center_wav
$\Delta\lambda_{m,solar}^{std,in\text{-}band}(b)$ [nm], bandwidth, solar and inband standardized response weighted	Band Column	4	std_inband_solar_wgted_width
Solar and total-band standardized response weighted parameters:			
$E_0^{std}(b)$ [W m^{-2} μm^{-1}], solar irradiances, standardized response weighted	Band Column	4	std_solar_wgted_height
$\lambda_{m,solar}^{std}(b)$ [nm], center wavelength, solar and standardized response weighted	Band Column	4	std_solar_wgted_center_wav
$\Delta\lambda_{m,solar}^{std}(b)$ [nm], bandwidth, solar and standardized response weighted	Band Column	4	std_solar_wgted_width
c(b,s) [none], Spectral out-of-band correction matrix	Band Index	4x4	spectral_corr_matrix
$PSF_{am}(c,b,s)$ [none], PSF functions	Camera Band Sample Camera Band 2x2 Sample Camera Band 4x4 Sample	PSF_{1x1}: 9x4x51 PSF_{2x2}: 9x4x25 PSF_{4x4}: 9x4x13	psf1x1 psf2x2 psf4x4

PAR(b) [none], PAR integration weights	PAR Band Column	3	par_int_wght

9.7 MISR ANCILLARY MIANCARP INFLTCAL PRODUCT

9.7.1 File Metadata Description

Table 9-11: File Metadata for Ancillary Radiometric INFLTCAL Product Files

Name	Type	Description
TITLE	8-bit signed char	Name of the ARP file
DATE	8-bit signed char	Date the file was written

9.7.2 Per-SDS Metadata Description

None.

9.7.3 Per-block Metadata Description

None.

9.7.4 Scientific Data Set Descriptions

The ARP data for each file are all in one Science Data Set (SDS). The global attributes hold all of the metadata. Each element in the SDS follows.

The ARP coefficients are placed into the HDF file in an averaging mode (subscript am), radiometric level (l), camera (c), band (b), and pixel (p) order. The index order is:

- averaging mode: 1x1, 1x4, 2x2, and 4x4;
- radiometric levels: from low to high values (0.001 to 1.0);
- camera order is: Df, Cf, Bf, Af, An, Aa, Ba, Ca, and Da;
- band order: Blue, Green, Red, NIR;
- pixel order is to be from 1 to 1504 for the forward cameras, and from 1504 to 1 for the nadir and aftward-viewing cameras, where this pixel index refers to the original camera clocking output order.

Parameters marked in column R have pixel order reversed for the forward cameras, as compared to the CCD read-out order**.**

Table 9-12: ARP: In-flight calibration data.

Parameter [units]	Dimension List	Number of values	ARP software name	R
Version number	Version	1	ifcd_version_no	
Radiometric calibration coefficients:				
Date range [none]	Date range Column	3	date_range	
Radiometric gain coefficients: $G_{0,am}(c,b)$ [DN] gain offset; $G_{1,am}(c,b)$ [DN/ (W m^{-2} µm^{-1} sr^{-1})] gain; $G_{2,am}(c,b)$ [DN/ (W m^{-2} µm^{-1} sr^{-1})^2] gain second order coefficient	Camera Band Active pixel Coefficient Camera Band 2x2 Summed pixel Coefficient Camera Band 4x4 Summed pixel Coefficient	$G_{0,1x1}$: 9x4x1504 $G_{1,1x1}$: 9x4x1504 $G_{2,1x1}$: 9x4x1504 $G_{0,2x2}$: 9x4x752 $G_{1,2x2}$: 9x4x752 $G_{2,2x2}$: 9x4x752 $G_{0,4x4}$: 9x4x376 $G_{1,4x4,}$: 9x4x376 $G_{2,4x4}$: 9x4x376	rad_gain_coeff_1x1 rad_gain_coeff_2x2 rad_gain_coeff_4x4	÷
$t_{integ}(c,b)$ [msec], integration time	Camera Band	9x4	integration_time	
Calibration uncertainties:				
ER(l) [none], equivalent reflectances	Radiometric level Column	15	equiv_reflect	
$\varepsilon_{abs_sys}(l,c,b)$ [%], absolute radiometric uncertainty: systematic component	Camera Band Radiometric level	9x4x15	abs_rad_unc_sys	
$\varepsilon_{abs}(l,c,b)$ [%], absolute radiometric uncertainty: total for 1x1	Camera Band Radiometric level	9x4x15	abs_rad_unc_total_1x1	
$\varepsilon_{cam_sys}(l,c,b)$ [%], camera-to-camera relative radiometric uncertainty: systematic component	Camera Band Radiometric level	9x4x15	cam_to_cam_rel_unc_sys	
$\varepsilon_{cam}(l,c,b)$ [%], camera-tocamera relative radiometric uncertainty: total for 1x1	Camera Band Radiometric level	9x4x15	cam_to_cam_rel_unc_total_1x1	
$\varepsilon_{band_sys}(l,c,b)$ [%], bandto-band relative radiometric uncertainty: systematic component	Camera Band Radiometric level	9x4x15	band_to_band_rel_unc_sys	
$\varepsilon_{band}(l,c,b)$ [%], band-toband relative radiometric uncertainty: total for 1x1	Camera Band Radiometric level	9x4x15	band_to_band_rel_unc_total_1x1	
$\varepsilon_{pix_sys}(l,c,b)$ [%], pixel-topixel relative	Camera Band	9x4x15	pixel_to_pixel_rel_unc_sys	

radiometric uncertainty: systematic component	Radiometric level			
ε_{pix}(l,c,b) [%], pixel-topixel relative radiometric uncertainty: total for 1x1	Camera Band Radiometric level	9x4x15	pixel_to_pixel_rel_unc_total_1x1	
SNR_{am}(l,c,b) [none], signal-to-noise ratios	Camera Band Radiometric level	SNR_{1x1}: 9x4x15 SNR_{1x4}: 9x4x15 SNR_{2x2}: 9x4x15 SNR_{4x4}: 9x4x15	snr_1x1 snr_1x4 snr_2x2 snr_4x4	
$DDQI_{am}$(c,b,s) [none], Detector Data Quality Indicators	Camera Band Active pixel	$DDQI_{1x1}$ 9x4x1504 $DDQI_{2x2}$ 9x4x752 $DDQI_{4x4}$ 9x4x376	ddqi_1x1 ddqi_2x2 ddqi_4x4	÷
F(c,b) [none], channel operability flag	Camera Band	9x4	chnl_op_flag	

9.8 MISR ANCILLARY MIANCARP CONFIG PRODUCT

9.8.1 File Metadata Description

Table 9-13: File Metadata for Ancillary Radiometric CONFIG Product Files

Name	Type	Description
TITLE	8-bit signed char	Name of the ARP file
DATE	8-bit signed char	Date the file was written

9.8.2 Per-grid Metadata Description

None.

9.8.3 Per-block Metadata Description

None.

9.8.4 Scientific Data Set Descriptions

The ARP data for each file are all in one Science Data Set (SDS). The global attributes hold all of the metadata. Each element in the SDS follows.

The ARP coefficients are placed into the HDF file in an averaging mode (subscript am), radiometric level (l), camera (c), band (b), and pixel (p) order. The index order is:

- averaging mode: 1x1, 1x4, 2x2, and 4x4;
- radiometric levels: from low to high values (0.001 to 1.0);
- camera order is: Df, Cf, Bf, Af, An, Aa, Ba, Ca, and Da;
- band order: Blue, Green, Red, NIR;
- pixel order is to be from 1 to 1504 for the forward cameras, and from 1504 to 1 for the nadir and aftward-viewing cameras, where this pixel index refers to the original camera clocking output order.

Parameter [unit]	Dimension List	Number of values	ARP software name
$L_{max}(b)$ [W m^{-2} μm^{-1} sr^{-1}], band weighted maximum radiance	Band Column	4	band_wgted_max_rad
$DN_{pix_sat}(c,b)$ [DN], pixel saturation threshold	Camera Band	9x4	pix_sat_thresh
n_{pix_sat}[none], number of allowable saturated pixels	Number	1	num_sat_pix
Pixel saturation block limits: $n_{am}(s)$ [none], saturation block start and saturation block end.	Pixel block Pixel block Pixel block Pixel block Pixel block Pixel block	n_{1x1}: 2 n_{2x2}: 2 n_{4x4}: 2	pix_satblk_1x1_str pix_satblk_1x1_end pix_satblk_2x2_str pix_satblk_2x2_end pix_satblk_4x4_str pix_satblk_4x4_end
$a_{pix_sat}(s)$ [none], pixel saturation noise coefficients	Coefficient Column	2	pix_sat_noise_coeff
$\varepsilon_{pix_sat}(s)$[%], pixel saturation error thresholds	Threshold Column	2	pix_sat_error_thresh
$DN_{line_sat}(c,b)$ [DN], line average threshold	Camera Band	9x4	line_av_thresh
$\Delta DN_{line_sat}(c,b)$ [DN], line average noise	Camera Band	9x4	line_av_noise
$\varepsilon_{line_sat}(s)$ [%], line average error thresholds	Threshold Column	2	line_av_error_thresh
Low DN threshold below which DN values would convert to negative radiances, and instead are set to zero	DN	1	DN_thresh
f, proportion of energy to subtract due to background	Camera Band	9x4	ghost_scalar
$\Delta lines_{1x1}$, number of lines to average for background	Lines	1	downtrack_lines_1x1
$\Delta lines_{2x2}$, number of lines to average for background	Lines	1	downtrack_lines_2x2
$\Delta lines_{4x4}$, number of lines to average for background	Lines	1	downtrack_lines_4x4
$\Delta pixels_{1x1}$, number of pixels to average for background	Pixels	1	crosstrack_pixels_1x1
$\Delta pixels_{2x2}$, number of pixels to average for background	Pixels	1	crosstrack_pixels_2x2
$\Delta pixels_{4x4}$, number of pixels to average for background	Pixels	1	crosstrack_pixels_4x4

9.9 MISR ANCILLARY MIANCACP APOP PRODUCT

9.9.1 File Metadata Description

The APOP global attributes are small pieces of information which provide information on the data contained in the file. Some of the information is redundant, in that it can be extracted from the data itself using native HDF function calls. This information is provided as an aid to human viewers of the data.

Table 9-14: Global Attributes

Attribute Name	Type	Value
Number of models	INT32	21
Number of input model types	INT32	21
Number of bands	INT32	4
Number of scattering angles	INT32	205
Number of particle shape models	INT32	3
Number of particle classifications[12]	INT32	5
Component Particle Properties - Summary Table	CHAR8	Text format summary of particle properties.

9.9.2 Per-grid Metadata Description

None.

9.9.3 Per-block Metadata Description

None.

9.9.4 Vdata Set Descriptions

HDF Vdatas are mixed data type structures which are dimensioned by records. Each record contains one or more fields, which may be of varying types. Character types are 1 byte long; float and integer types are 4 bytes long. Each field contains one or more pieces of information, all of the same type.

9.9.4.1 APOP Vdata fill values

Several Vdata fields are allowed to have fill values where there is no applicable valid value. These

[12] "Number of particle classifications" refers to the number of classifications of pure aerosol particle models by physical properties such as size and shape. Examples of particle classifications include "small", "medium", "large", "spherical", and "non-spherical".

fields are the Log normal characteristic radius, Log normal characteristic width, and Power law exponent, in the Input Pure Particle Types Vdata and the Data Table Vdata. In all of these cases, the fill value is -999.0.

9.9.4.2 APOP Vdata parameters

The APOP file contains six Vdatas. The vdatas are summarized in the table below. Details of each vdata structure follow immediately after the summary.

Table 9-15: APOP Vdata Summary

Vdata name	Vdata class	Records	Description
Data Table	Mixed data type	One per model	Contains the primary APOP data
Bands	Mixed data type	One per band	Contains a list specifying the wavelength and band number used for each band
Particle Classification Indices	Integer	1	Index for each particle classification.
Scattering Angles	Floating point	One per scattering angle	Contains a list of the scattering angles used

9.9.4.2.1 Data Table

Table 9-16: Data Table Fields

Name	Units	Elements	Type
Aerosol model name	None.	80	CHAR8
Model number	None.	1	INT32
Input model number	None.	1	INT32
Shape	None.	80	CHAR8
Size distribution	None.	80	CHAR8
Minimum radius	mm	1	FLOAT32
Maximum radius	mm	1	FLOAT32
Log normal characteristic radius	mm	1	FLOAT32
Log normal characteristic width	mm	1	FLOAT32
Power law exponent	None.	1	FLOAT32
Arithmetic mean radius	mm	1	FLOAT32
Weighted mean particle cross section	mm2	1	FLOAT32
Weighted mean particle volume	mm3	1	FLOAT32
Effective particle radius	mm	1	FLOAT32
Effective size variance	mm	1	FLOAT32
Volume weighted mean radius	mm	1	FLOAT32
Particle fractional number per classification	none	5	FLOAT32
Particle fractional volume per classification	none	5	FLOAT32
Layer base height	km	1	FLOAT32
Layer top height	km	1	FLOAT32

Layer scale height	km	1	FLOAT32
Spectral refractive index real	None.	4	FLOAT32
Spectral refractive index imaginary	None.	4	FLOAT32
Spectral scattering cross section	mm2	4	FLOAT32
Spectral extinction cross section	mm2	4	FLOAT32
Spectral single scattering albedo	None.	4	FLOAT32
Spectral anisotropy parameter	None.	4	FLOAT32

9.9.4.2.2 Bands.

Table 9-17: Bands Fields

Field Name	Units	Elements	Type
Band number	None.	1	INT32
std_inband_solar_wgted_center_wav	mm	1	FLOAT32

9.9.4.2.3 Particle Classification Indices.

Table 9-18: Particle Classification Indices Fields

Field Name	Units	Elements	Type
Small (< 0.35 micron radius) index	None.	1	INT32
Medium (0.35 - 0.7 micron radius) index	None.	1	INT32
Large (> 0.7 micron radius) index	None.	1	INT32
Spherical index	None.	1	INT32
Non-spherical index	None.	1	INT32

9.9.4.2.4 Scattering Angles.

Table 9-19: Scattering Angles Fields

Field Name	Units	Elements	Type
Scattering angle	degrees	1	FLOAT32

9.9.5 Scientific Data Set Descriptions

HDF Scientific Data Sets (SDSs) are multi-dimensional arrays which utilize a single data type. The APOP uses an SDS to provide information on the phase functions of all models. Dimension scales for the phase function information are also provided.

Table 9-20: APOP SDS Summary

SDS Name	Units	Dimensions	Type	Description

Spectral Phase Functions	sr^{-1}	21 x 205 x 4	FLOAT32	Effective scattering phase function on a fixed grid of scattering angles
Particle Fractional Spectral Optical Depth Per Classification	None.	21 x 5 x 4	FLOAT32	Fractional optical depth contribution of each aerosol model to particle size classifications (small, medium, large) and shape classifications (spherical, non-spherical).
Model number	None.	21	INT32	Model number for each pure particle model. Used as a dimension scale for the Spectral Phase Functions SDS
Classifier	None.	5	INT32	Index for each pure particle classification by size and shape. Used as a dimension scale for the SDS
Scattering angle	degrees	205	FLOAT32	Scattering angle grid. Used as a dimension scale for the Spectral Phase Functions SDS
Band	µm	4	FLOAT32	Wavelength for each band. Used as a dimension scale for the Spectral Phase Functions SDS

9.10 MISR ANCILLARY MIANCACP MIXTURE PRODUCT

9.10.1 File Metadata Description

The Mixture global attributes are small pieces of information which provide information on the data contained in the file. Some of the information is redundant, in that it can be extracted from the data itself using native HDF function calls. This information is provided as an aid to human viewers of the data.

Table 9-21: Global Attributes

Attribute Name	Type	Value
Number of mixtures	INT32	74
Maximum available number of components	INT32	3
Number of component models contained in APOP file	INT32	21
Number of bands	INT32	4
Number of mixture classifications[13]	INT32	5
Number of algorithm types/retrieval paths	INT32	3
Reference band number	INT32	2
Reference band optical depth	FLOAT32	1.0
Mixture Properties - Summary Table	CHAR8	Text format summary of mixture properties.

13 "Number of mixture classifications" refers to the number of classification bins for particle mixtures, based on properties such as size and shape. Examples of classifications include "small", "medium", "large", "spherical", and "non-spherical".

9.10.2 Per-grid Metadata Description

None.

9.10.3 Per-block Metadata Description

None.

9.10.4 Vdata Set Descriptions

HDF Vdatas are mixed data type structures which are dimensioned by records. Each record contains one or more fields, which may be of varying types. Character types are 1 byte long; float and integer types are 4 bytes long. Each field contains one or more pieces of information, all of the same type. The Mixture file contains five of these Vdatas, which are described below.

9.10.4.1 Mixture Vdata fill values

None.

9.10.4.2 Mixture Vdata parameters

The Mixture file contains five Vdatas. The vdatas are summarized in the table below. Details of each vdata structure follow immediately after the summary.

Table 9-22: Mixture Vdata Summary

Vdata name	Vdata class	Records	Description
Mixture Data	Mixed data type	One per mixture	Contains the mixture data
Component Model Legend	Mixed data type	One per component model	Contains a list specifying the model number and model name of each component caontained in the mixture file
Bands	Mixed data type	One per band	Contains a list specifying the wavelength and band number used for each band
Mixture Classification Indices	Integer	1	Index for each mixture classification.
Retrieval Path Indices	Integer	One	Contains a list specifying the index into the retrieval path applicability flag array for each algorithm type
Retrieval Path Applicability Flag Legend	Mixed data type	Two	Contains the meaning of each retrieval path applicability flag value

9.10.4.2.1 Mixture Data.

Table 9-23: Mixture Data Fields

Field Name	Units	Elements	Type

Aerosol mixture number	None.	1	INT32
Mixture type	None.	80	CHAR8
Component model number	None.	3	INT32
Component fractional optical depth in reference band	None.	3	FLOAT32
Normalized mixture spectral optical depth	None.	4	FLOAT32
Mixture spectral single scattering albedo	None.	4	FLOAT32
Mixture fractional number per classification	None.	5	FLOAT32
Mixture fractional volume per classification	None.	5	FLOAT32
Retrieval path applicability flag	None.	3	INT32

9.10.4.2.2 Component Model Legend.

Table 9-24: Component Model Legends Fields

Field Name	Units	Elements	Type
Component model number	None.	1	INT32
Component model name	None.	80	CHAR8

9.10.4.2.3 Bands.

Table 9-25: Bands Fields

Field Name	Units	Elements	Type
Band number	None.	1	INT32
std_inband_solar_wgted_center_wav	µm	1	FLOAT32

9.10.4.2.4 Mixture Classification Indices.

Table 9-26: Mixture Classification Indices Fields

Field Name	Units	Elements	Type
Small (< 0.35 micron radius) index	None.	1	INT32
Medium (0.35- 0.7 micron radius) index	None.	1	INT32
Large (> 0.7 micron radius) index	None.	1	INT32
Spherical index	None.	1	INT32
Non-spherical index	None.	1	INT32

9.10.4.2.5 Retrieval Path Indices.

Table 9-27: Retrieval Path Indices Fields

Field Name	Elements	Type
Dark water index	1	INT32
Optically thick atmosphere index (NO LONGER USED)	1	INT32
Heterogeneous land index	1	INT32

9.10.4.2.6 Retrieval Path Applicability Flag Legend

Table 9-28: Retrieval Path Applicability Flag Legend Fields

Field Name	Elements	Type
Retrieval path applicability flag value	1	INT32
Meaning of flag value	80	CHAR8

9.10.5 Scientific Data Set Descriptions

HDF Scientific Data Sets (SDSs) are multi-dimensional arrays which utilize a single data type. The Mixture file uses an SDS to provide information on the spectral optical depth fractions for each component. Dimension scale information is also provided.

Table 9-29: Mixture SDS Summary

SDS Name	Units	Dimensions	Type	Description
Component Fractional Spectral Optical Depth	None.	4 x 3 x74	FLOAT32	Relative abundances (as fractions of total optical depth) of the 3 aerosol components, specified in each spectral band
Mixture Fractional Spectral Optical Depth Per Classification	None.	4 x 5 x 74	FLOAT32	Relative abundances (as fractions of total optical depth) of particles by size (small, medium, large), and by shape (spherical, non-spherical), specified in each spectral band
Band	μm	4	FLOAT32	Wavelength for each band. Used as a dimension scale for the Component Fractional Spectral Optical Depth SDS

9.11 MISR ANCILLARY MIANCACP CLIM-LIKELY PRODUCT[14]

9.11.1 File Metadata Description

TBD.

9.11.2 Per-grid Metadata Description

TBD.

14 This file does not yet exist, and its format has not been defined.

9.11.3 Per-block Metadata Description

TBD.

9.11.4 Vdata Set Descriptions

TBD.

9.11.5 Scientific Data Set Descriptions

TBD.

9.12 MISR ANCILLARY MIANTASC PRODUCT

9.12.1 File Metadata Description

Table 9-30: File Metadata for TASC Files

Name	Type	Description
TITLE	8-bit signed char	Name of the ARP file
DATE	8-bit signed char	Date the file was written

9.12.2 Per-grid Metadata Description

Table 9-31: Per-grid Metadata for TASC Files

Common Grid Attributes	Definition	Data Type	Valid Values
HeightGrid	Lower bounds of the height bins in kilometers	FLOAT32	0.0 to 25.0 in increments of 0.5

9.12.3 Per-block Metadata Description

None.

9.12.4 Grid Data Set Descriptions

Table 9-32: TASC Field Dimension Descriptions

Dimension	Description	Valid Values
XDim	*XDim* is the number of longitude bins in the grid. Since the TASC covers the entire world and is presented at 1x1 degree resolution, this dimension ranges from 1 to 360.	360
YDim	*XDim* is the number of latitude bins in the grid. Since the TASC covers the entire world and is presented at 1x1 degree resolution, this dimension ranges from 1 to 180.	180
HeightDim	*HeightDim* covers the entire height range (0 .0 to 25.0 km) in bins of 500 meters.	42

Table 9-33: TASC Grid Dataset Descriptions

Field Name Parameter Description	Dimension List	Number Type	Units	Flag Values or Valid Range
Grid TASCParams (Spatial Resolution: 1.0 degree x 1.0 degree, XDim = 360, YDim = 180)				
MeanSfcAlt Mean Surface Elevation	XDim, YDim	FLOAT32	kilometers	
SfcWindSpeedZonal Zonal Surface Wind Speed (Version F02_04 of TASC dataset uses SSM/I for wind data that only provides the overall vector speed, rather than the individual zonal and meridional components. Therefore, SfcWindSpeedZonal and SfcWindSpeedMerid are set to the same value. Version F02_03 of the TASC used QuikScat data that did not have this limitation).	XDim, YDim	FLOAT32	meters/second	
SfcWindSpeedMerid Meridional Surface Wind Speed (See above note)	XDim, YDim	FLOAT32	meters/second	
ColPrecipWater Climatological column precipitable water above surface level.	XDim, YDim	FLOAT32	centimeters	
SfcPressure Climatological Atmospheric Surface Pressure	XDim, YDim	FLOAT32	hecto Pascals	
SfcTemperature Climatological Atmospheric Surface Temperature	XDim, YDim	FLOAT32	degrees Kelvin	
TempVsHeightProfile Climatological Atmospheric Temperature vs. Height Profile	XDim, YDim, HeightDim	FLOAT32	degrees Kelvin	
ColOzoneAbund	XDim, YDim	FLOAT32	Dobsons	

Climatological Column Ozone Abundance				
TropHeight Climatological Tropopause Height	XDim, YDim	FLOAT32	kilometers	
HighCloudHeight Climatological High Cloud Height	XDim, YDim	FLOAT32	kilometers	
SnowIceMask NSIDC Snow/Ice Coverage Mask	XDim,YDim	INT8	none	0 = Snow/Ice not present 1= Snow/Ice present
SnowIceType NSIDC Snow/Ice Type Mask	XDim,YDim	INT8	none	0 = Snow/Ice not present 1 = Fresh Snow 2 = SeaIce 3 = Permanent Snow
SfcWindSpeedDataSource Source for Surface Wind Speed Data	XDim,YDim	UINT8	none	1 = SSM/I (version F02_04) 1 = QuikScat (version F02_03) 2 = Pre-existing values (SSM/I or QuikScat did not contain valid data)

10 MISR LEVEL 3 HDFEOS PRODUCTS

10.1 MISR LEVEL 3 HDFEOS PRODUCT GRANULE NAMES

MISR Level 3 Products are composed of six different kinds of file granules reported at four different time scales; daily, monthly, seasonal, and yearly. The files have an identical format on each of the time scales. The file granules are listed below (Table 10-1).

Table 10-1: MISR Level 3 File Granule Names

MISR LEVEL 3 FILE GRANULE NAME[15]	ESDT Name	Section
MISR_AM1_CGGRP_mmm_dd_yyyy_Fff_vvvv.hdf	MIL3DRD	§10.5
MISR_AM1_CGGRP_FIRSTLOOK_mmm_dd_yyyy_Fff_vvvv .hdf	MI3DRDF	
MISR_AM1_CGGRP_mmm_yyyy_Fff_vvvv.hdf	MIL3MRD	
MISR_AM1_CGGRP_ FIRSTLOOK_mmm_yyyy_Fff_vvvv.hdf	MI3MRDF	
MISR_AM1_CGGRP_sss_yyyy_Fff_vvvv.hdf	MIL3QRD	
MISR_AM1_CGGRP_yyyy_Fff_vvvv.hdf	MIL3YRD	
MISR_AM1_CGAS_mmm_dd_yyyy_Fff_vvvv.hdf	MIL3DAE	§10.6
MISR_AM1_CGAS_ FIRSTLOOK_mmm_dd_yyyy_Fff_vvvv.hdf	MI3DAEF	
MISR_AM1_CGAS_mmm_yyyy_Fff_vvvv.hdf	MIL3MAE	
MISR_AM1_CGAS_ FIRSTLOOK_mmm_yyyy_Fff_vvvv.hdf	MI3MAEF	
MISR_AM1_CGAS_sss_yyyy_Fff_vvvv.hdf	MIL3QAE	
MISR_AM1_CGAS_yyyy_Fff_vvvv.hdf	MIL3YAE	
MISR_AM1_CGLS_mmm_dd_yyyy_Fff_vvvv.hdf	MIL3DLS	§10.7
MISR_AM1_CGLS_ FIRSTLOOK_mmm_dd_yyyy_Fff_vvvv.hdf	MI3DLSF	
MISR_AM1_CGLS_mmm_yyyy_Fff_vvvv.hdf	MIL3MLS	
MISR_AM1_CGLS_ FIRSTLOOK_mmm_yyyy_Fff_vvvv.hdf	MI3MLSF	
MISR_AM1_CGLS_sss_yyyy_Fff_vvvv.hdf	MIL3QLS	
MISR_AM1_CGLS_yyyy_Fff_vvvv.hdf	MIL3YLS	
MISR_AM1_CGAL_mmm_dd_yyyy_Fff_vvvv.hdf	MIL3DAL	§10.8
MISR_AM1_CGAL_ FIRSTLOOK_mmm_dd_yyyy_Fff_vvvv.hdf	MI3DALF	
MISR_AM1_CGAL_mmm_yyyy_Fff_vvvv.hdf	MIL3MAL	

15 “mmm” is the three character month (one of “JAN”, “FEB”, “MAR”, “APR”, “MAY”, “JUN”, “JUL”, “AUG”, “SEP”, “OCT”, “NOV”, “DEC”), “sss” is the season (one of “WIN”, “SPR”, “SUM”, “FALL”), “dd” is the two digit day (e.g., “03”), “yyyy” is the four digit year (e.g., “2002”), “ff” is the format version number (e.g. “01”), and “vvvv” is the data version number (e.g., “0001”).

MISR_AM1_CGAL_ FIRSTLOOK_mmm_yyyy_Fff_vvvv.hdf	MI3MALF	
MISR_AM1_CGAL_sss_yyyy_Fff_vvvv.hdf	MIL3QAL	
MISR_AM1_CGAL_yyyy_Fff_vvvv.hdf	MIL3YAL	
MISR_AM1_CGCL_mmm_dd_yyyy_Fff_vvvv.hdf	MIL3DCLD	§10.9
MISR_AM1_CGCL_ FIRSTLOOK_mmm_dd_yyyy_Fff_vvvv.hdf	MI3DCDF	
MISR_AM1_CGCL_mmm_yyyy_Fff_vvvv.hdf	MIL3MCLD	
MISR_AM1_CGCL_ FIRSTLOOK_mmm_yyyy_Fff_vvvv.hdf	MI3MCDF	
MISR_AM1_CGCL_sss_yyyy_Fff_vvvv.hdf	MIL3QCLD	
MISR_AM1_CGCL_yyyy_Fff_vvvv.hdf	MIL3YCLD	
MISR_AM1_CFbA_mmm_dd_yyyy_Fff_vvvv.hdf	MIL3DCFA	§10.10
MISR_AM1_CFbA_mmm_yyyy_Fff_vvvv.hdf	MIL3MCFA	
MISR_AM1_CFbA_sss_yyyy_Fff_vvvv.hdf	MIL3QCFA	
MISR_AM1_CFbA_yyyy_Fff_vvvv.hdf	MIL3YCFA	

10.2 MISR LEVEL 3 HDFEOS PRODUCT GRANULE BRIEF DESCRIPTIONS

Level 3 provides a global summary of Level 1 and Level 2 data. Level 1 and 2 parameters of interest are averaged over a day, month, season, or year and the results reported on a geographic grid, with resolution 0.5 degree by 0.5 degrees, 1 degree by 1 degree, 2.5 degree by 2.5 degree, or 5 degree by 5 degree — depending on the product. In addition, for some parameters the variance of that parameter and covariance with other parameters are also reported. To reduce the size of the Level 3 files, the variance/covariance is reported at a coarser resolution of 1 degree by 1 degree.

10.3 MISR LEVEL 3 HDFEOS PRODUCT GRANULE DATA SETS

The product will be produced as several separate ESDTs, each with one physical file (Table 10-2). There are 6 different kinds of files, each reported on 4 different time scales.

Each file contains one or more HDF-EOS grids. Each grid is in a geographic projection, with a resolution of either 0.5 degree by 0.5 degree, 1 degree by 1 degree, 2.5 degree by 2.5 degree or 5 degree by 5 degree.

Table 10-2: Level 3 Global Product Files and Grid Datasets

ESDT Short	Local Granule ID[16]	Grid Dataset Name

16 mmm" is the three character month (one of "JAN", "FEB", "MAR", "APR", "MAY", "JUN", "JUL", "AUG", "SEP", "OCT", "NOV", "DEC"), "sss" is the season (one of "WIN", "SPR", "SUM", "FALL"), "dd" is the two digit day (e.g., "03"),"yyyy" is the four digit year (e.g., "2002"), "ff" is the format version number (e.g. "01"), and "vvvv" is the data version number (e.g., "0001")

name		
MIL3DRD MI3DRDF MIL3MRD MI3MRDF MIL3QRD MIL3YRD	MISR_AM1_CGGRP_mmm_dd_yyyy_Fff_vvvv.hdf MISR_AM1_CGGRP_FIRSTLOOK_mmm_dd_yyyy_Fff_vvvv.hdf MISR_AM1_CGGRP_mmm_yyyy_Fff_vvvv.hdf MISR_AM1_CGGRP_FIRSTLOOK_mmm_yyyy_Fff_vvvv.hdf MISR_AM1_CGGRP_sss_yyyy_Fff_vvvv.hdf MISR_AM1_CGGRP_yyyy_Fff_vvvv.hdf	GeorectifiedRadianceAverage GeorectifiedRadianceCovariance
MIL3DAE MI3DAEF MIL3MAE MI3MAEF MIL3QAE MIL3YAE	MISR_AM1_CGAS_mmm_dd_yyyy_Fff_vvvv.hdf MISR_AM1_CGAS_FIRSTLOOK_mmm_dd_yyyy_Fff_vvvv.hdf MISR_AM1_CGAS_mmm_yyyy_Fff_vvvv.hdf MISR_AM1_CGAS_FIRSTLOOK_mmm_yyyy_Fff_vvvv.hdf MISR_AM1_CGAS_sss_yyyy_Fff_vvvv.hdf MISR_AM1_CGAS_yyyy_Fff_vvvv.hdf	AerosolParameterAverage
MIL3DLS MI3DLSF MIL3MLS MI3MLSF MIL3QLS MIL3YLS	MISR_AM1_CGLS_mmm_dd_yyyy_Fff_vvvv.hdf MISR_AM1_CGLS_FIRSTLOOK_mmm_dd_yyyy_Fff_vvvv.hdf MISR_AM1_CGLS_mmm_yyyy_Fff_vvvv.hdf MISR_AM1_CGLS_FIRSTLOOK_mmm_yyyy_Fff_vvvv.hdf MISR_AM1_CGLS_sss_yyyy_Fff_vvvv.hdf MISR_AM1_CGLS_yyyy_Fff_vvvv.hdf	LandParameterAverage
MIL3DAL MI3DALF MIL3MAL MI3MALF MIL3QAL MIL3YAL	MISR_AM1_CGAL_mmm_dd_yyyy_Fff_vvvv.hdf MISR_AM1_CGAL_FIRSTLOOK_mmm_dd_yyyy_Fff_vvvv.hdf MISR_AM1_CGAL_mmm_yyyy_Fff_vvvv.hdf MISR_AM1_CGAL_FIRSTLOOK_mmm_yyyy_Fff_vvvv.hdf MISR_AM1_CGAL_sss_yyyy_Fff_vvvv.hdf MISR_AM1_CGAL_yyyy_Fff_vvvv.hdf	AlbedoAverage_1_degree AlbedoAverage_5_degree
MIL3DCLD MI3DCDF MIL3MCLD MI3MCDF MIL3QCLD MIL3YCLD	MISR_AM1_CGCL_mmm_dd_yyyy_Fff_vvvv.hdf MISR_AM1_CGCL_FIRSTLOOK_mmm_dd_yyyy_Fff_vvvv.hdf MISR_AM1_CGCL_mmm_yyyy_Fff_vvvv.hdf MISR_AM1_CGCL_FIRSTLOOK_mmm_yyyy_Fff_vvvv.hdf MISR_AM1_CGCL_sss_yyyy_Fff_vvvv.hdf MISR_AM1_CGCL_yyyy_Fff_vvvv.hdf	CloudAverage CloudWindAverage
MIL3DCFA MIL3MCFA MIL3QCFA MIL3YCFA	MISR_AM1_CFbA_mmm_dd_yyyy_Fff_vvvv.hdf MISR_AM1_CFbA_mmm_yyyy_Fff_vvvv.hdf MISR_AM1_CFbA_sss_yyyy_Fff_vvvv.hdf MISR_AM1_CFbA_yyyy_Fff_vvvv.hdf	CFbA

There is a standard set of HDF vdatas included in each of the files that contains metadata information. See for example Table 10-3. This includes:

1. There is a vdata “Source file” that contains a description of the swaths that are summarized in the Level 3 product. The vdata has four columns, “Orbit number”, “Path number”, “Local Granule Id”, and “Local version Id”. There is a row in the vdata for each swath that is summarized in the Level 3 product.

2. For each HDF-EOS grid[17] there is a vdata “Time of Observations <Grid name>” which contains the date and times that a Level 3 grid cell was seen by the MISR instrument. This vdata has 9 columns: “Latitude Index”, “Longitude Index”, “Orbit”, “Path”, “Year”, “Month”, “Day”, “Hour”, “Minute”. The vdata is sorted, first by latitude index, then longitude index, then by orbit. The latitude and longitude indices are the same as the indices used to look into a field in the HDF-EOS grid. There is one entry for each swath that sees a Level 3 grid cell.
3. For each HDF dimension that appears in a HDF-EOS grid there is a vdata “<Dimension name> Enumeration” that contains a description of each value of the enumeration. For example, several of the file types contains grid indexed by a the dimension “Band”. There is a vdata “Band Enumeration” that contains 4 values “Blue (443 nm)”, “Green (555 nm)”, “Red (670 nm)”, and “Infrared (865 nm)”. This indicates that a Band dimension value of 0 is the blue band, a value of 1 is the green band, and so on.
4. For each field in an HDF-EOS grid, there is a vdata that summarizes overall statistics about the field, named “<Field name> Statistic”. For example, MIL3MLS contains a grid with a field “NDVI average”, so there is a vdata “NDVI average Statistic”. The vdata has 5 columns “Minimum”, “Maximum”, “Mean”, “Standard Deviation”, and “Count”. These vdata can be used by display packages to scale the data for display, among other uses.

10.4 DIFFERENCES BETWEEN FIRSTLOOK AND FINAL PROCESSING

The MISR processing stream has now been split up into two parts, "FIRSTLOOK" and "FINAL", to adjust for the new time dependence of the TASC and RCCT ancillary datasets. Both the TASC (Atmospheric and Surface Climatology) and RCCT (Radiometric Camera-by-Camea CloudMask Thresholds) datasets now contain data that is unique to the time period for which the datasets are constructed. The TASC dataset now contains snow-ice and ocean surface wind speed values that are updated on a monthly basis, and the RCCM Thresholds are now derived from the observations for a given 3-month period. Therefore, these datasets cannot be generated until the end of the month or season. Rather than delaying all MISR processing of Level 2 and Level 3 until these datasets are available, the Level 2 and Level 3[18] data are now produced twice over. These two different runs are given the names "FIRSTLOOK" and "FINAL". The FIRSTLOOK processing uses the TASC from the same month/previous year and the RCCT from the same season in the previous year. When the updated datasets are available, the FINAL processing which uses the correct RCCT and TASC data is run. The FIRSTLOOK products are distinguished by the presence of the "FIRSTLOOK" in the filenames, the FINAL products use the original filenames.

---

17 This has not yet been implemented in the component radiance product or CFbA product, although it is present in the other three Level 3 products. A future version of the software will add this for the component radiance product.

18 There is currently no FIRSTLOOK version of the Cloud Fraction by Altitude Product

10.5 MISR LEVEL 3 MIL3DRD, MIL3MRD, MIL3QRD, MIL3YRD COMPONENT GLOBAL GEORECTIFIED PRODUCT

10.5.1 File Metadata Description

Table 10-3: CGGRP File metadata

Vdata Name	Vdata Field Name	Definition	Data Type	Units	Valid Range
Source File	Orbit Number	List of orbits that are summarized in this Level 3 file.	INT32	N/A	1-999999
	Path Number	List of paths that are summarized in this Level 3 file.	UINT8	N/A	1-233
	Local Granule Id	List of local granule IDs summarized in this Level 3 file. Only the DF terrain file is listed, since the other input files follow from this example file.	CHAR8 x 80	N/A	N/A
	Local Version Id	List of local version IDs summarized in this Level 3 file. Only DF terrain is listed.	CHAR8 x 100	N/A	N/A
<Dimension name> Enumeration [19]	Value	Meaning of each value in the dimension. For example, Band has 4 entries: “Blue (443 nm)”, “Green (555 nm)”, “Red (670 nm)”, “Infrared (865 nm)”.	CHAR8 x 60	N/A	N/A
<Grid field name> Statistic[20]	Minimum	Minimum found in grid. This is taken over XDim and YDim. Other dimensions are collapsed into a 1D array[21].	FLOAT32	Same as for grid	Same as for grid
	Maximum	Maximum found in grid	FLOAT32	Same as for grid	Same as for grid
	Mean	Mean of grid	FLOAT32	Same as for grid	Same as for grid
	Standard Deviation	Standard deviation of grid	FLOAT32	N/A	>= 0
	Count	Count of grid	INT32	N/A	>= 0

19 <Dimension name> is a place holder for each dimension in file. For example, there is one Vdata named “Band Enumeration”, and another named “Camera Enumeration”. SeeTable 10-4 for list of Dimensions.

20 <Grid field name> is a place holder for each grid field name in file. For example, there is one Vdata named “Average Statistic”, and another named “Average count Statistic”. See Table 10-5 for list of grid fields.

21 For example, for a grid field that is XDim x YDim x Camera x Band the average is reported as a Camera x Band flattened into a 1 D list of 9 x 4 = 36 values.

10.5.2 File Dimensions

Table 10-4: CGGRP File Dimensions

Dimension	Description	Number values	Values
Camera	MISR Camera	9	0 = Df, 1 = Cf, 2 = Bf, 3 = Af, 4 = An, 5 = Aa, 6 = Ba, 7 = Ca, 8 = Da
Band	MISR Camera Band	4	0 = Blue (443 nm), 1 = Green (555 nm), 2 = Red (670 nm), 3 = Infrared (865 nm)
CovarianceIndex	Index in covariance matrix	666	0 = Variance Df Blue (443 nm), 1 = Covariance Df Blue (443 nm), Df Green (555 nm) 2 = Variance Df Green (555 nm) ... This is all the lower triangle entries of the covariance matrix
RCCMCategory2	RCCM Categegory	5	0 = No retrieval 1 = High confidence cloudy 2 = Low confidence cloudy 3 = Low confidence clear 4 = High confidence clear

10.5.3 Grid Dataset Description

Table 10-5: CGGRP Grid Dataset Description

Field Name Parameter Description	Dimensions List	Number Type	Units	Flag Values
GeorectifiedRadianceAverage (0.5 degree x 0.5 degree, XDim = 720, YDim = 360)				
Average fill flag This is an implementation detail, and not likely to be of interest to a user.[22]	YDim, XDim	INT8	N/A	0 = all other fields fill 1 = other fields might not be fill
Average Average of radiances	YDim, XDim, Camera, Band	FLOAT32	W m^{-2} sr^{-1} μm^{-1}	-9999 = fill
Average count Count of radiances used in average	YDim, XDim, Camera, Band	INT32	N/A	N/A

22 This is a flag field. If the value is 0, then all of the other fields in the GeorectifiedRadianceAverage grid will contain fill data for the grid cell location. However, even if the flag is 1 other fields might still contain fill data. This is used during processing to avoid looking at grid cells that are certain not to have data.

RCCM category count Histogram of RCCM results.	YDim, XDim, RCCMCategory2, Camera	INT32	N/A	N/A
GeorectifiedRadianceCovariance (1 degree x 1 degree, XDim = 360, YDim = 180				
Covariance fill flag This is an implementation detail, and not likely to be of interest to a user.[23]	YDim, XDim	INT8	N/A	0 = all other fields fill 1 = other fields might not be fill
Covariance Variance and covariances between radiances. This contains only the lower triangle part of the symmetric covariance matrix.	YDim, XDim, CovarianceIndex	FLOAT32	$W^2 m^{-4} sr^{-2} \mu m^{-2}$	0 = fill
Covariance average 1 Average of the first radiance in the covariance.[24]	YDim, XDim, CovarianceIndex	FLOAT32	$W m^{-2} sr^{-1} \mu m^{-1}$	-9999 = fill
Covariance average 2 Average of the second radiance in the covariance.[25]	YDim, XDim, CovarianceIndex	FLOAT32	$W m^{-2} sr^{-1} \mu m^{-1}$	-9999 = fill
Covariance count Count of radiance pairs that are used in covariance	YDim, XDim, CovarianceIndex	INT32	N/A	N/A

10.6 MISR LEVEL 3 MIL3DAE, MIL3MAE, MIL3QAE, MIL3YAE COMPONENT GLOBAL AEROSOL PRODUCT

10.6.1 File Metadata Description

Table 10-6: CGAS File metadata

Vdata Name	Vdata Field Name	Definition	Data Type	Units	Valid Range
Source File	Orbit Number	List of orbits that are summarized in this Level 3 file.	INT32	N/A	1-999999
	Path Number	List of paths that are summarized in this Level 3 file.	UINT8	N/A	1-233
	Local Granule Id	List of local granule IDs summarized in this Level 3 file.	CHAR8 x 80	N/A	N/A

23 This is a flag field. If the value is 0, then all of the other fields in the GeorectifiedRadianceCovariance grid will contain fill data for the grid cell location. However, even if the flag is 1 other fields might still contain fill data. This is used during processing to avoid looking at grid cells that are certain not to have data.

24 This is almost the same as the information in the “Average” field except: 1) it is reported on 1 degree by 1 degree grid rather than 0.5 degree by 0.5 degree and 2) only radiances where both the first and second radiance in the covariance are available are include, e.g. if the this is for “Covariance Df Red, Cf Blue” only radiances where both the Df Red and Cf Blue are not fill are included.

25 This is almost the same as the information in the “Average” field except: 1) it is reported on 1 degree by 1 degree grid rather than 0.5 degree by 0.5 degree and 2) only radiances where both the first and second radiance in the covariance are available are include, e.g. if the this is for “Covariance Df Red, Cf Blue” only radiances where both the Df Red and Cf Blue are not fill are included.

	Local Version Id	List of local version IDs summarized in this Level 3 file.	CHAR8 x 100	N/A	N/A
Time of Observations AerosolParameterAverage[26]	Latitude Index	Latitude index, same as index used to read a field of the HDF-EOS grid.	INT16	N/A	Same as for grid
	Longitude Index	Latitude index, same as index used to read a field of the HDF-EOS grid.	INT16	N/A	Same as for grid
	Orbit	Orbit number of swath that saw Level 3 grid cell.	INT32	N/A	> 0
	Path	Path of swath that saw Level 3 grid cell.	UINT8	N/A	1 - 233
	Year	Year Level 3 grid cell was seen. This is in years since 2000 (e.g., 2002 is recorded as "2").	UINT8	N/A	0 - Present
	Month	Month Level 3 grid cell was seen.	UINT8	N/A	1-12
	Day	Day Level 3 grid cell was seen.	UINT8	N/A	1-31
	Hour	Hour Level 3 grid cell was seen.	UINT8	N/A	0-23
	Minute	Minute Level 3 grid cell was seen.	UINT8	N/A	0-59
<Dimension name> Enumeration [27]	Value	Meaning of each value in the dimension.	CHAR8 x 60	N/A	N/A
<Grid field name> Statistic[28]	Minimum	Minimum found in grid. This is taken over XDim and YDim. Other dimensions are collapsed into a 1D array[29].	FLOAT32	Same as for grid	Same as for grid
	Maximum	Maximum found in grid	FLOAT32	Same as for grid	Same as for grid
	Mean	Mean of grid	FLOAT32	Same as for grid	Same as for grid
	Standard Deviation	Standard deviation of grid	FLOAT32	N/A	>= 0
	Count	Count of grid	INT32	N/A	>= 0

10.6.2 File Dimensions

Table 10-7: CGAS File Dimensions

26 This vdata is sorted first by latitude index, then longitude index, and then orbit.

27 <Dimension name> is a place holder for each dimension in file. For example, there is one Vdata named "AlgorithmType Enumeration". SeeTable 10-7 for list of Dimensions.

28 <Grid field name> is a place holder for each grid field name in file. For example, there is one Vdata named "Optical depth average Statistic". See Table 10-8 for list of grid fields.

29 For example, for a grid field that is XDim x YDim x AlgorithmType the average is reported as a Algorithm Type flattened into a 1 D list of 8 values.

Dimension	Description	Number of values	Values
AlgorithmType	Algorithm type flag used by Level 2 processing to generate the Aerosol optical depth.	10	0 = No retrieval, 1 = Dark water retrieval, *2 =* 3 = Heterogeneous land retrieval, 4 = 5 = 6 = 7 = 8 = Homogeneous land retrieval 9 = Water Retrieval
Band	MISR Camera Band	4	0 = Blue (443 nm), 1 = Green (555 nm), 2 = Red (670 nm), 3 = Infrared (865 nm)
OpticalDepth	Optical Depth Range	9	0 = All 1 = < 0.05 2 = 0.05 – 0.15 3 = 0.15 – 0.25 4 = 0.25 – 0.4 5 = 0.4 – 0.6 6 = 0.6 – 0.8 7 = 0.8 – 1.0 8 = > 1.0
ParticleType	Particle type	6	0 = All 1= Small particle (< 0.35 micron radius) 2 = Medium particle (0.35 – 0.7 micron radius) 3 =Large particle (> 0.7 micron radius) 4 = Spherical particle 5 = Nonspherical particle
RetrievalSuccessType	Flag indicating retrieval success	2	0 = Successful Retrieval 1 = Failed Retrieval

10.6.3 Grid Dataset Description

Table 10-8: CGAS Grid Dataset Description

Field Name Parameter Description	Dimensions List	Number Type	Units	Flag Values
AerosolParameterAverage (0.5 degree x 0.5 degree, XDim = 720, YDim = 360)				
Absorbing optical depth This is the absorbing optical depth. This is (1 – SSA) * AOD.	YDim, XDim, OpticalDepth, Band	FLOAT32	N/A	-9999 = fill
Algorithm type count Number of Level 2 grid cells that were processed with a particular algorithm.	YDim, XDim, AlgorithmType, RetrievalSucce	INT32	N/A	N/A

	ssType			
Angstrom Exponent The angstrom exponent**.**	YDim, XDim, OpticalDepth	FLOAT32	NA	-9999 = fill
Average fill flag This is an implementation detail, and not likely to be of interest to a user.[30]	YDim, XDim	INT8	N/A	0 = all other fields fill 1 = other fields might not be fill
Optical depth average Average of optical depth.[31]	YDim, XDim, OpticalDepth, Band, ParticleType	FLOAT32	N/A	-9999 = fill
Optical depth average count Count of optical depths used in average.	YDim, XDim, OpticalDepth, Band, ParticleType	INT32	N/A	N/A
Optical depth standard deviation Standard deviation of optical depth	YDim, XDim, OpticalDepth, Band, ParticleType	FLOAT32	NA	NA
Single-scatter albedo The single-scatter albedo	YDim, XDim, OpticalDepth, Band	FLOAT32	NA	-9999 = fill
Single-scatter albedo count Count of optical depths used in single-scatter albedo	YDim, XDim, OpticalDepth, Band	INT32	NA	NA

10.7 MISR LEVEL 3 MIL3DLS, MIL3MLS, MIL3QLS, MIL3YLS COMPONENT GLOBAL LAND/SURFACE PRODUCT

10.7.1 File Metadata Description

Table 10-9: CGLS File metadata

Vdata Name	Vdata Field Name	Definition	Data Type	Units	Valid Range
Source File	Orbit Number	List of orbits that are summarized in this Level 3 file	INT32	N/A	1-999999
	Path Number	List of paths that are summarized in this Level 3 file	UINT8	N/A	1-233

30 This is a flag field. If the value is 0, then all of the other fields in the AerosolParameterAverage grid will contain fill data for the grid cell location. However, even if the flag is 1 other fields might still contain fill data. This is used during processing to avoid looking at grid cells that are certain not to have data.

31 There are several optical depths reported in Level 2. Level 3 uses the RegMeanSpectralOptDepth (see Table 8-10 on page 229). The Level 2 data has a value for each of the 4 MISR spectral bands, but Level 3 uses only the green band.

	Local Granule Id	List of local granule IDs summarized in this Level 3 file.	CHAR8 x 80	N/A	N/A
	Local Version Id	List of local version IDs summarized in this Level 3 file.	CHAR8 x 100	N/A	N/A
Time of Observations LandParameterAverage[32]	Latitude Index	Latitude index, same as index used to read a field of the HDF-EOS grid.	INT16	N/A	Same as for grid
	Longitude Index	Latitude index, same as index used to read a field of the HDF-EOS grid.	INT16	N/A	Same as for grid
	Orbit	Orbit number of swath that saw Level 3 grid cell.	INT32	N/A	> 0
	Path	Path of swath that saw Level 3 grid cell.	UINT8	N/A	1 - 233
	Year	Year Level 3 grid cell was seen. This is in years since 2000 (e.g., 2002 is recorded as "2").	UINT8	N/A	0 - Present
	Month	Month Level 3 grid cell was seen.	UINT8	N/A	1-12
	Day	Day Level 3 grid cell was seen.	UINT8	N/A	1-31
	Hour	Hour Level 3 grid cell was seen.	UINT8	N/A	0-23
	Minute	Minute Level 3 grid cell was seen.	UINT8	N/A	0-59
<Dimension name> Enumeration[33]	Value	Meaning of each value in the dimension. For example, Band has 4 entries: "Blue (443 nm)", "Green (555 nm)", "Red (670 nm)", "Infrared (865 nm)"	CHAR8 x 60	N/A	N/A
<Grid field name> Statistic[34]	Minimum	Minimum found in grid. This is taken over XDim and YDim. Other dimensions are collapsed into a 1-D array[35].	FLOAT32	Same as for grid	Same as for grid
	Maximum	Maximum found in grid	FLOAT32	Same as for grid	Same as for grid
	Mean	Mean of grid	FLOAT32	Same as for grid	Same as for grid
	Standard Deviation	Standard deviation of grid	FLOAT32	N/A	>= 0
	Count	Count of grid	INT32	N/A	>= 0

32 This vdata is sorted first by latitude index, then longitude index, and then orbit.

33 <Dimension name> is a place holder for each dimension in file. For example, there is one Vdata named "Band Enumeration", and another named "Camera Enumeration". See Table 10-10 for list of Dimensions.

34 <Grid field name> is a place holder for each grid field name in file. For example, there is one Vdata named "DHR average Statistic", and another named "DHR average count Statistic". See Table 10-11 for list of grid fields.

35 For example, for a gird field that is XDim x YDim x Camera X Band the average is reported as a Camera x Band flattened into a 1-D list of 9 x 4 = 36 values.

10.7.2 File Dimensions

Table 10-10: CGLS File Dimensions

Dimension	Description	Number values	Values
Band	MISR Camera Band	4	0 = Blue (443 nm), 1 = Green (555 nm), 2 = Red (670 nm), 3 = Infrared (865 nm)

10.7.3 Grid Dataset Description

Table 10-11: CGLS Grid Dataset Description

Field Name Parameter Description	Dimensions List	Number Type	Units	Flag Values
LandParameterAverage (0.5 degree x 0.5 degree, XDim = 720, YDim = 360)				
Average fill flag This is an implementation detail, and not likely to be of interest to a user.[36]	YDim, XDim	INT8	N/A	0 = all other fields fill 1 = other fields might not be fill
DHR average Average of DHR (Directional-Hemispheric Reflectance). Defined as radiant exitance divided by irradiance under illumination from a single direction. Also known as the "black sky" albedo.	YDim, XDim, Band	FLOAT32	N/A	-9999 = fill
DHR average count Count of DHR values used in average.	YDim, XDim, Band	INT32	N/A	N/A
DHRPAR average Average of DHR integrated over the Photosynthetically Active Radiation (PAR) band.	YDim, XDim	FLOAT32	N/A	-9999 = fill
DHRPAR average count Count of DHRPAR values used in average.	YDim, XDim	INT32	N/A	N/A
DHR Shortwave approximation average Average of DHR for a broad shortwave band (400-2500 nm), approximated from visible bands[37].	YDim, XDim	FLOAT32	N/A	-9999 = fill
DHR Shortwave approximation average count Count of DHRPAR values used in average	YDim, XDim	INT32	N/A	N/A
FPAR average	YDim,	FLOAT32	N/A	-9999 = fill

36 This is a flag field. If the value is 0, then all of the other fields in the LandParameterAverage grid will contain fill data for the grid cell location. However, even if the flag is 1 other fields might still contain fill data. This is used during processing to avoid looking at grid cells that are certain not to have data.

37 See "Hemispherical reflectance and albedo estimates from the accumulation of across-track sun-synchro nous satellite data", Weiss M, Baret F, Leroy M, Begue A, Hautecoeur O, Santer R, Journal of Geophysical Research-Atmospheres 104: (D18) 22221-22232, September 27, 1999.

Average of Fractional absorbed Photosynthetically Active Radiation (FPAR). Defined as PAR irradiance absorbed by live vegetation divided by incident PAR irradiance.	XDim			
FPAR average count Count of FPAR values used in average	YDim, XDim	INT32	N/A	N/A
LAI average Average of Leaf Area Index (LAI).	YDim, XDim	FLOAT32	N/A	-9999 = fill
LAI average count Count of LAI values used in average	YDim, XDim	INT32	N/A	N/A
NDVI average Average of Normalized Difference Vegetation Index (NDVI).	YDim, XDim	FLOAT32	N/A	-9999 = fill
NDVI average count Count of NDVI values used in average	YDim, XDim	INT32	N/A	N/A

10.8 MISR LEVEL 3 MIL3DAL, MIL3MAL, MIL3QAL, MIL3YAL COMPONENT GLOBAL ALBEDO PRODUCT

10.8.1 File Metadata Description

Table 10-12: CGAL File metadata

Vdata Name	Vdata Field Name	Definition	Data Type	Units	Valid Range
Source File	Orbit Number	List of orbits that are summarized in this Level 3 file	INT32	N/A	1-999999
	Path Number	List of paths that are summarized in this Level 3 file	UINT8	N/A	1-233
	Local Granule Id	List of local granule IDs summarized in this Level 3 file.	CHAR8 x 80	N/A	N/A
	Local Version Id	List of local version IDs summarized in this Level 3 file.	CHAR8 x 100	N/A	N/A
Time of Observations <Grid Name>[38]	Latitude Index	Latitude index, same as index used to read a field of the HDF-EOS grid.	INT16	N/A	Same as for grid
	Longitude Index	Latitude index, same as index used to read a field of the HDF-EOS grid.	INT16	N/A	Same as for grid
	Orbit	Orbit number of swath that saw Level 3 grid cell.	INT32	N/A	> 0
	Path	Path of swath that saw Level 3 grid cell.	UINT8	N/A	1 - 233

38 This vdata is sorted first by latitude index, then longitude index, and then orbit.

	Year	Year Level 3 grid cell was seen. This is in years since 2000 (e.g., 2002 is recorded as “2”).	UINT8	N/A	0 - Present
	Month	Month Level 3 grid cell was seen.	UINT8	N/A	1-12
	Day	Day Level 3 grid cell was seen.	UINT8	N/A	1-31
	Hour	Hour Level 3 grid cell was seen.	UINT8	N/A	0-23
	Minute	Minute Level 3 grid cell was seen.	UINT8	N/A	0-59
<Dimension name> Enumeration[39]	Value	Meaning of each value in the dimension. For example, Band has 5 entries: “Blue (443 nm)”, “Green (555 nm)”, “Red (670 nm)”, “Infrared (865 nm)”, “Broadband”	CHAR8 x 60	N/A	N/A
<Grid field name> Statistic[40]	Minimum	Minimum found in grid. This is taken over XDim and YDim. Other dimensions are collapsed into a 1D array[41].	FLOAT32	Same as for grid	Same as for grid
	Maximum	Maximum found in grid	FLOAT32	Same as for grid	Same as for grid
	Mean	Mean of grid	FLOAT32	Same as for grid	Same as for grid
	Standard Deviation	Standard deviation of grid	FLOAT32	N/A	>= 0
	Count	Count of grid	INT32	N/A	>= 0

10.8.2 File Dimensions

Table 10-13: CGAL File Dimensions

Dimension	Description	Number values	Values
Band	MISR Camera Band	5	0 = Blue (443 nm), 1 = Green (555 nm), 2 = Red (670 nm), 3 = Infrared (865 nm) 4 = Broadband
CosineSolarZenithAngle	Cosine of the solar zenith angle	10	0 = 0 - 0.1 1 = 0.1 - 0.2 … 9 = 0.9 - 1.0

39 <Dimension name> is a place holder for each dimension in file. For example, there is one Vdata named “Band Enumeration”, and another named “Camera Enumeration”. See Table 10-13 for list of Dimensions.

40 <Grid field name> is a place holder for each grid field name in file. For example, there is one Vdata named “Expansive albedo average - 1 deg Statistic”, and another named “Expansive albedo swath count - 1 deg Statis tic”. See Table 10-14 for list of grid fields.

41 For example, for a grid field that is XDim x YDim x Camera x Band the average is reported as a Camera x Band flattened into a 1 D list of 9 x 4 = 36 values.

LandOcean	Land or Ocean	3	0 = All 1 = Land 2 = Ocean
Latitude	Latitude range	180	0 = 89 to 90 1 = 88 to 89 … 179 = -90 to -89
SurfaceType	Surface type	3	0 = Land 1 = Ocean 2 = Snow/ice
TextureType	Texture type	3	0 = Smooth 1 = Medium 2 = Rough
HistogramBin	Histogram bin	220	0 = Underflow 1 = 0 to 0.005 2 = 0.005 - 0.010 … 200 = 0.995 - 1.000 201 = 1 to 1.5 202 = 1.5 to 2 … 218 = 9.5 to 10 219 = Overflow

10.8.3 Grid Dataset Description

Table 10-14: CGAL Grid Dataset Description

Field Name Parameter Description	Dimensions List	Number Type	Units	Flag Values
AlbedoAverage_1_degree (1 degree x 1degree, XDim = 360, YDim = 180)				
Average fill flag - 1 deg This is an implementation detail, and not likely to be of interest to a user.[42]	YDim, XDim	INT8	N/A	0 = all other fields fill 1 = other fields might not be fill
Swath count - 1 deg Number of swaths that see a Level 3 Grid Cell	YDim, XDim	INT32	N/A	N/A
Expansive albedo average - 1 deg Average of expansive albedo. This is the average of the reflected flux divided by the average solar insolation - not a direct average of the Level 2 Albedos	YDim, XDim, Band	FLOAT32	N/A	-9999 = fill
Expansive albedo first moment - 1 deg Average of expansive albedo. This is a direct average of the	YDim, XDim, Band	FLOAT32	N/A	-9999 = fill

42 This is a flag field. If the value is 0, then all of the other fields in the AlbedoAverage_1_degree grid will contain fill data for the grid cell location. However, even if the flag is 1 other fields might still contain fill data. This is used during processing to avoid looking at grid cells that are certain not to have data.

Level 2 Albedos.				
Expansive albedo standard deviation - 1 deg Standard deviation of expansive albedo	YDim, XDim, Band	FLOAT32	N/A	-9999 = fill
Expansive albedo solar insolation - 1 deg Average solar insolation of pixels that contribute to Expansive albedo average	YDim, XDim, Band	FLOAT32	$\frac{W}{m^2 \mu m}$	-9999 = fill
Expansive albedo swath count - 1 deg Number of swaths that contribute to average.	YDim, XDim, Band	INT32	N/A	N/A
Local albedo average - 1 deg Average of local albedo. This is the average of the reflected flux divided by the average solar insolation - not a direct average of the Level 2 Albedos	YDim, XDim, Band	FLOAT32	N/A	-9999 = fill
Local albedo first moment - 1 deg Average of local albedo. This is a direct average of the Level 2 Albedos.	YDim, XDim, Band	FLOAT32	N/A	-9999 = fill
Local albedo standard deviation - 1 deg Standard deviation of local albedo	YDim, XDim, Band	FLOAT32	N/A	-9999 = fill
Local albedo solar insolation - 1 deg Average solar insolation of pixels that contribute to local albedo average	YDim, XDim, Band	FLOAT32	$\frac{W}{m^2 \mu m}$	-9999 = fill
Local albedo swath count - 1 deg Number of swaths that contribute to average.	YDim, XDim, Band	INT32	N/A	N/A
Restrictive albedo average - 1 deg Average of restrictive albedo. This is the average of the reflected flux divided by the average solar insolation - not a direct average of the Level 2 Albedos	YDim, XDim, Band	FLOAT32	N/A	-9999 = fill
Restrictive albedo first moment - 1 deg Average of restrictive albedo. This is a direct average of the Level 2 Albedos.	YDim, XDim, Band	FLOAT32	N/A	-9999 = fill
Restrictive albedo standard deviation - 1 deg Standard deviation of restrictive albedo	YDim, XDim, Band	FLOAT32	N/A	-9999 = fill
Restrictive albedo solar insolation - 1 deg Average solar insolation of pixels that contribute to restrictive albedo average	YDim, XDim, Band	FLOAT32	$\frac{W}{m^2 \mu m}$	-9999 = fill
Restrictive albedo swath count - 1 deg Number of swaths that contribute to average.	YDim, XDim, Band	INT32	N/A	N/A
AlbedoAverage_5_degree (5 degree x 5 degree, XDim = 72, YDim = 36)				
Average fill flag - 5 deg This is an implementation detail, and not likely to be of interest to a user.[43]	YDim, XDim	INT8	N/A	0 = all other fields fill 1 = other fields might not be fill
Swath count - 5 deg Number of swaths that see a Level 3 Grid Cell	YDim, XDim	INT32	N/A	N/A
Expansive albedo average - 5 deg Average of expansive albedo. This is the average of the	YDim, XDim, Band	FLOAT32	N/A	-9999 = fill

43 This is a flag field. If the value is 0, then all of the other fields in the AlbedoAverage_5_degree grid will contain fill data for the grid cell location. However, even if the flag is 1 other fields might still contain fill data. This is used during processing to avoid looking at grid cells that are certain not to have data.

reflected flux divided by the average solar insolation - not a direct average of the Level 2 Albedos				
Expansive albedo first moment - 5 deg Average of expansive albedo. This is a direct average of the Level 2 Albedos.	YDim, XDim, Band	FLOAT32	N/A	-9999 = fill
Expansive albedo standard deviation - 5 deg Standard deviation of expansive albedo	YDim, XDim, Band	FLOAT32	N/A	-9999 = fill
Expansive albedo solar insolation - 5 deg Average solar insolation of pixels that contribute to Expansive albedo average	YDim, XDim, Band	FLOAT32	$\frac{W}{m^2 \mu m}$	-9999 = fill
Expansive albedo swath count - 5 deg Number of swaths that contribute to average.	YDim, XDim, Band	INT32	N/A	N/A
Local albedo average - 5 deg Average of local albedo. This is the average of the reflected flux divided by the average solar insolation - not a direct average of the Level 2 Albedos	YDim, XDim, Band	FLOAT32	N/A	-9999 = fill
Local albedo first moment - 5 deg Average of local albedo. This is a direct average of the Level 2 Albedos.	YDim, XDim, Band	FLOAT32	N/A	-9999 = fill
Local albedo standard deviation - 5 deg Standard deviation of local albedo	YDim, XDim, Band	FLOAT32	N/A	-9999 = fill
Local albedo solar insolation - 5 deg Average solar insolation of pixels that contribute to local albedo average	YDim, XDim, Band	FLOAT32	$\frac{W}{m^2 \mu m}$	-9999 = fill
Local albedo swath count - 5 deg Number of swaths that contribute to average.	YDim, XDim, Band	INT32	N/A	N/A
Restrictive albedo average - 5 deg Average of restrictive albedo. This is the average of the reflected flux divided by the average solar insolation - not a direct average of the Level 2 Albedos	YDim, XDim, Band	FLOAT32	N/A	-9999 = fill
Restrictive albedo first moment - 5 deg Average of restrictive albedo. This is a direct average of the Level 2 Albedos.	YDim, XDim, Band	FLOAT32	N/A	-9999 = fill
Restrictive albedo standard deviation - 5 deg Standard deviation of restrictive albedo	YDim, XDim, Band	FLOAT32	N/A	-9999 = fill
Restrictive albedo solar insolation - 5 deg Average solar insolation of pixels that contribute to restrictive albedo average	YDim, XDim, Band	FLOAT32	$\frac{W}{m^2 \mu m}$	-9999 = fill
Restrictive albedo swath count - 5 deg Number of swaths that contribute to average.	YDim, XDim, Band	INT32	N/A	N/A

10.8.4 SDS Dataset Description

Table 10-15: CGAL SDS Dataset Description

Field Name Parameter Description	Dimensions List	Number Type	Units	Flag Values

Local albedo histogram Histogram of local albedo values	CosineSolarZenithAngle x Band x SurfaceType x TextureType x HistogramBin	INT32	N/A	N/A
Zonal expansive albedo average Zonal summary of the average expansive albedo. This is the average of the reflected flux divided by the average solar insolation - not a direct average of the Level 2 Albedos.	Latitude x Band x LandOcean	FLOAT32	N/A	-9999 = fill
Zonal expansive albedo first moment Zonal summary of the average expansive albedo. This is a direct average of the Level 2 Albedos.	Latitude x Band x LandOcean	FLOAT32	N/A	-9999 = fill
Zonal expansive albedo standard deviation Zonal summary of the standard deviation of the expansive albedo.	Latitude x Band x LandOcean	FLOAT32	N/A	-9999 = fill
Zonal expansive albedo solar insolation Zonal summary of the average solar insolation of pixels that contribute to expansive albedo average.	Latitude x Band x LandOcean	FLOAT32	$\frac{W}{m^2 \mu m}$	-9999 = fill
Zonal expansive albedo swath count Zonal summary of the number of swaths that contribute to the average.	Latitude x Band x LandOcean	INT32	N/A	N/A
Zonal local albedo average Zonal summary of the average local albedo. This is the average of the reflected flux divided by the average solar insolation - not a direct average of the Level 2 Albedos.	Latitude x Band x LandOcean	FLOAT32	N/A	-9999 = fill
Zonal local albedo first moment Zonal summary of the average local albedo. This is a direct average of the Level 2 Albedos.	Latitude x Band x LandOcean	FLOAT32	N/A	-9999 = fill
Zonal local albedo standard deviation Zonal summary of the standard deviation of the local albedo.	Latitude x Band x LandOcean	FLOAT32	N/A	-9999 = fill
Zonal local albedo solar insolation Zonal summary of the average solar insolation of pixels that contribute to local albedo average.	Latitude x Band x LandOcean	FLOAT32	$\frac{W}{m^2 \mu m}$	-9999 = fill
Zonal local albedo swath count Zonal summary of the number of swaths that contribute to the average.	Latitude x Band x LandOcean	INT32	N/A	N/A
Zonal restrictive albedo average Zonal summary of the average restrictive albedo. This is the average of the reflected flux divided by the average solar insolation - not a direct average of the Level 2 Albedos.	Latitude x Band x LandOcean	FLOAT32	N/A	-9999 = fill
Zonal restrictive albedo first moment Zonal summary of the average restrictive albedo. This is a direct average of the Level 2 Albedos.	Latitude x Band x LandOcean	FLOAT32	N/A	-9999 = fill
Zonal restrictive albedo standard deviation Zonal summary of the standard deviation of the restrictive albedo.	Latitude x Band x LandOcean	FLOAT32	N/A	-9999 = fill

Zonal restrictive albedo solar insolation Zonal summary of the average solar insolation of pixels that contribute to restrictive albedo average.	Latitude x Band x LandOcean	FLOAT32	$\frac{W}{m^2 \mu m}$	-9999 = fill
Zonal restrictive albedo swath count Zonal summary of the number of swaths that contribute to the average.	Latitude x Band x LandOcean	INT32	N/A	N/A

10.9 MISR LEVEL 3 MIL3DCLD, MIL3MCLD, MIL3QCLD, MIL3YCLD COMPONENT GLOBAL CLOUD PRODUCT

10.9.1 File Metadata Description

Table 10-16: CGCL File metadata

Vdata Name	Vdata Field Name	Definition	Data Type	Units	Valid Range
Source File	Orbit Number	List of orbits that are summarized in this Level 3 file	INT32	N/A	1-999999
	Path Number	List of paths that are summarized in this Level 3 file	UINT8	N/A	1-233
	Local Granule Id	List of local granule IDs summarized in this Level 3 file.	CHAR8 x 80	N/A	N/A
	Local Version Id	List of local version IDs summarized in this Level 3 file.	CHAR8 x 100	N/A	N/A
Time of Observations <Grid Name>[44]	Latitude Index	Latitude index, same as index used to read a field of the HDF-EOS grid.	INT16	N/A	Same as for grid
	Longitude Index	Latitude index, same as index used to read a field of the HDF-EOS grid.	INT16	N/A	Same as for grid
	Orbit	Orbit number of swath that saw Level 3 grid cell.	INT32	N/A	> 0
	Path	Path of swath that saw Level 3 grid cell.	UINT8	N/A	1 - 233
	Year	Year Level 3 grid cell was seen. This is in years since 2000 (e.g., 2002 is recorded as “2”).	UINT8	N/A	0 - Present
	Month	Month Level 3 grid cell was seen.	UINT8	N/A	1-12
	Day	Day Level 3 grid cell was seen.	UINT8	N/A	1-31
	Hour	Hour Level 3 grid cell was seen.	UINT8	N/A	0-23
	Minute	Minute Level 3 grid cell was seen.	UINT8	N/A	0-59

44 This vdata is sorted first by latitude index, then longitude index, and then orbit.

<Dimension name> Enumeration[45]	Value	Meaning of each value in the dimension. For example, Band has 4 entries: “Blue (443 nm)”, “Green (555 nm)”, “Red (670 nm)”, “Infrared (865 nm)”	CHAR8 x 60	N/A	N/A
<Grid field name> Statistic[46]	Minimum	Minimum found in grid. This is taken over XDim and YDim. Other dimensions are collapsed into a 1D array[47].	FLOAT32	Same as for grid	Same as for grid
	Maximum	Maximum found in grid	FLOAT32	Same as for grid	Same as for grid
	Mean	Mean of grid	FLOAT32	Same as for grid	Same as for grid
	Standard Deviation	Standard deviation of grid	FLOAT32	N/A	>= 0
	Count	Count of grid	INT32	N/A	>= 0

10.9.2 File Dimensions

Table 10-17: CGCL File Dimensions

Dimension	Description	Number of values	Values
HeightBin	Height bin	15	0 = < 0.5 km 1 = 0.5 - 1 km 2 = 1 - 1.5 km 3 = 1.5 - 2 km 4 = 2 - 2.5 km 5 = 2.5 - 3 km 6 = 3 - 5 km 7 = 5 - 7 km 8 = 7 - 9 km 9 = 9 - 11 km 10 = 11 - 13 km 11 = 13 - 15 km 12 = 15 - 17 km 13 = 17 - 19 km 14 = > 19 km
WindIndex	Index of wind vector	3	0 = North/South Speed 1 = East/West Speed 2 = Total Speed
WindType	Type of algorithm used for wind	2	0 = Without wind correction

45 <Dimension name> is a place holder for each dimension in file. For example, there is one Vdata named “CloudType Enumeration”, and another named “HeightBin Enumeration”. See Table 10-17 for list of Dimen sions.

46 <Grid field name> is a place holder for each grid field name in file. For example, there is one Vdata named “Stereo height bin average Statistic”, and another named “Wind speed average Statistic”. See Table 10-18 for list of grid fields.

47 For example, for a grid field that is XDim x YDim x HeightBin x WindType the average is reported as a HeightBin x WindType flattened into a 1 D list of 15 x 2 = 30 values.

	(with or without height correction)		1 = With wind correction

10.9.3 Grid Dataset Description

Table 10-18: CGCL Grid Dataset Description

Field Name Parameter Description	Dimensions List	Number Type	Units	Flag Values
CloudAverage (0.5 degree x 0.5 degree, XDim = 720, YDim = 360)				
Average fill flag This is an implementation detail, and not likely to be of interest to a user.[48]	YDim, XDim	INT8	N/A	0 = all other fields fill 1 = other fields might not be fill
Stereo height histogram Count of Level 2 pixels found at a particular height	YDim, XDim, HeightBin, WindType	INT32	N/A	N/A
Stereo height bin average Average of the stereo height for the pixels falling in a particular histogram bin. This is a bit more accurate than just using the mid-point of a histogram bin.	YDim, XDim, HeightBin, WindType	FLOAT32	m	-9999 = fill
CloudWindAverage (2.5 degree x 2.5 degree, XDim = 144, YDim = 72)				
Average fill flag - Wind This is an implementation detail, and not likely to be of interest to a user.[49]	YDim, XDim	INT8	N/A	0 = all other fields fill 1 = other fields might not be fill
Wind speed average Average wind speed. This is given as a vector of North/South, East/ West, and Total. The convention is that a postive value for North/ South means the wind vector points North. Similarly, a positive value for East/West means the wind vector points East	YDim, XDim, HeightBin, WindIndex	FLOAT32	m/s	-9999 = fill
Wind speed standard deviation Standard devation of wind speed.	YDim, XDim, HeightBin, WindIndex	FLOAT32	m/s	0 = fill
Wind speed swath count Number of swaths that contributed to wind speed average and standard deviation	YDim, XDim, HeightBin, WindIndex	INT32	N/A	N/A

48 This is a flag field. If the value is 0, then all of the other fields in the CloudAverage grid will contain fill data for the grid cell location. However, even if the flag is 1 other fields might still contain fill data. This is used during processing to avoid looking at grid cells that are certain not to have data.

49 This is a flag field. If the value is 0, then all of the other fields in the CloudWindAverage grid will contain fill data for the grid cell location. However, even if the flag is 1 other fields might still contain fill data. This is used during processing to avoid looking at grid cells that are certain not to have data.

10.10 MISR LEVEL 3 MIL3DCFA, MIL3MCFA, MIL3QCFA, MIL3YCFA CLOUD FRACTION BY ALTITUDE PRODUCT

10.10.1 File Metadata Description

Table 10-19: CFbA File metadata

Vdata Name	Vdata Field Name	Definition	Data Type	Units	Valid Range
Source File	Orbit Number	List of orbits that are summarized in this Level 3 file	INT32	N/A	1-999999
	Path Number	List of paths that are summarized in this Level 3 file	INT32	N/A	1-233
	Local Granule Id	List of local granule IDs summarized in this Level 3 file.	CHAR8 x 128	N/A	N/A
	Local Version Id	List of local version IDs summarized in this Level 3 file.	CHAR8 x 128	N/A	N/A
	Included in Summary	List of true/false values to indicate if an orbit was included (1) or was screend out due to poor registration (0).	UINT8	N/A	0-1
<Dimension name> Enumeration[50]	Value	Meaning of each value in the dimension. For example, Latitude has 360 entries: “[90.0,89.5)”, “[89.5, 89.0)”, “[89.0, 88.5)”, and so on.	CHAR8 x 128	N/A	N/A

10.10.2 File Dimensions

Table 10-20: CFbA File Dimensions

Dimension	Description	Number of values	Values
HeightBin	Height bin	15	0 = (-infinity,-500m) 1 = [-500m, 0m) 2 = [0m, 500m) 3 = [500m, 1000m) 4 = [1000m, 1500m) 5 = [1500m, 2000m) 6 = [2000m, 2500m)

50 <Dimension name> is a place holder for each dimension in file. For example, there is one Vdata named “CloudType Enumeration”, and another named “HeightBin Enumeration”. See Table 10-20 for list of Dimen sions.

			7 = [2500m, 3000m) 8 = [3000m, 3500m) 9 = [3500m, 4000m) 10 = [4000m, 4500m) 11 = [4500m, 5000m) 12 = [5000m, 5500m) 13 = [5500m, 6000m) 14 = [6000m, 6500m) 15 = [6500m, 7000m) 16 = [7000m, 7500m) 17 = [7500m, 8000m) 18 = [8000m, 8500m) 19 = [8500m, 9000m) 20 = [9000m, 9500m) 21 = [9500m, 10000m) 22 = [10000m, 10500m) 23 = [10500m, 11000m) 24 = [11000m, 11500m) 25 = [11500m, 12000m) 26 = [12000m, 12500m) 27 = [12500m, 13000m) 28 = [13000m, 13500m) 29 = [13500m, 14000m) 30 = [14000m, 14500m) 31 = [14500m, 15000m) 32 = [15000m, 15500m) 33 = [15500m, 16000m) 34 = [16000m, 16500m) 35 = [16500m, 17000m) 36 = [17000m, 17500m) 37 = [17500m, 18000m) 38 = [18000m, 18500m) 39 = [18500m, 19000m) 40 = [19000m, 19500m) 41 = [19500m, 20000m) 42 = [20000m, infinity) 43 = (-infinity, infinity) 44 = No Height Retrieval

10.10.3 Grid Dataset Description

Table 10-21: CFbA Grid Dataset Description

Field Name Parameter Description	Dimensions List	Number Type	Units	Flag Values
CloudAverage (0.5 degree x 0.5 degree, XDim = 720, YDim = 360)				
CloudTopHeightFraction_Avg Precent cloud fraction at a particular height	YDim, XDim, HeightBin	FLOAT32	percent	-9999 = fill Range: 0.0-1.0

CloudTopHeightFraction_Num[51] Number of values that were averaged together to generate CloudTopHeightFraction_Avg	YDim, XDim, HeightBin	UINT32	N/A	0 = fill
CloudTopHeightFraction_Std Standard deviation of cloud fraction	YDim, XDim, HeightBin	FLOAT32	N/A	-9999 = fill
CloudTopHeightFraction_NN_Avg Precent cloud fraction at a particular height, uses nearest neighbor heights up to 200km	YDim, XDim, HeightBin	FLOAT32	percent	-9999 = fill Range: 0.0-1.0
CloudTopHeightFraction_NN_Num[1] Number of values that were averaged together to generate CloudTopHeightFraction_NN_Avg	YDim, XDim, HeightBin	UINT32	N/A	0 = fill
CloudTopHeightFraction_NN_Std Standard deviation of cloud fraction generated using nearest neighbor heights	YDim, XDim, HeightBin	FLOAT32	N/A	-9999 = fill

[51] In the monthly file, this number represents the number of days that were combined to create the average. In seasonal an annual files, this number represents the number of months that were combined.

11 MISR LEVEL 3 netCDF PRODUCTS

11.1 INTRODUCTION

MISR Level 3 netCDF product consist of the CMV product, and a series of Component netCDF products. All of these products are created using the Network Common Data Form (netCDF) file format (http:// www.unidata.ucar.edu/software/netcdf/docs/netcdf.html) to conform to the NetCDF Climate and Forecast (CF) Metadata Conventions, V1.0 (http://www.cgd.ucar.edu/cms/eaton/cf-metadata/CF-1.0.html). The Component netCDF products contain Level 2 product components averaged (or otherwise summarized) and then resampled onto a latitude/longitude grid. The CMV product contains specific L2TC parameters organized as a list of point observations rather than a grid.

11.2 MISR LEVEL 3 NETCDF COMPONENT PRODUCT

11.2.1 MISR LEVEL 3 NETCDF COMPONENT PRODUCT GRANULE NAMES

MISR Level 3 netCDF Products are composed of five types of file granules reported at four time scales: daily, monthly, seasonal, and yearly. The files have an identical format on each of the time scales. The file granules are listed below (Table 11-1).

Table 11-1: MISR Level 3 netCDF File Granule Names

MISR LEVEL 3 NETCDF COMPONENT FILE GRANULE NAME[52]	ESDT Name	Section
MISR_AM1_CGGRP_0_5_DEG_mmm_dd_yyyy_Fff_vvvv.nc MISR_AM1_CGGRP_1_DEG_mmm_dd_yyyy_Fff_vvvv.nc MISR_AM1_CGGRP_0_5_DEG_FIRSTLOOK_mmm_dd_yyyy_Fff_vvvv.nc MISR_AM1_CGGRP_1_DEG_FIRSTLOOK_mmm_dd_yyyy_Fff_vvvv.nc	MIL3DRDN MI3DRDNF	§11.2.5
MISR_AM1_CGGRP_0_5_DEG_mmm_yyyy_Fff_vvvv.nc MISR_AM1_CGGRP_1_DEG_mmm_yyyy_Fff_vvvv.nc MISR_AM1_CGGRP_0_5_DEG_FIRSTLOOK_mmm_yyyy_Fff_vvvv.nc	MIL3MRDN MI3MRDNF	§11. 2.5

52 "mmm" is the three-character month (one of "DEC", "JAN", "FEB", "MAR", "APR", "MAY", "JUN", "JUL", "AUG", "SEP", "OCT", "NOV"), "sss" is the season (one of "WIN", "SPR", "SUM", "FALL", corresponding to groups of three months starting with December), "dd" is the two-digit day (e.g., "03"), "yyyy" is the four-digit year (e.g., "2002"), "ff" is the format version number (e.g. "01"), and "vvvv" is the data version number (e.g., "0001").

MISR_AM1_CGGRP_1_DEG_FIRSTLOOK_mmm_yyyy_Fff_vvvv.nc		
MISR_AM1_CGGRP_0_5_DEG_sss_yyyy_Fff_vvvv.nc MISR_AM1_CGGRP_1_DEG_sss_yyyy_Fff_vvvv.nc	MIL3QRDN	§11. 2.5
MISR_AM1_CGGRP_0_5_DEG_yyyy_Fff_vvvv.nc MISR_AM1_CGGRP_1_DEG_yyyy_Fff_vvvv.nc	MIL3YRDN	§11. 2.5
MISR_AM1_CGAS_0_5_DEG_mmm_dd_yyyy_Fff_vvvv.nc MISR_AM1_CGAS_0_5_DEG_FIRSTLOOK_mmm_dd_yyyy_Fff_vvvv.nc	MIL3DAEN MI3DAENF	§11. 2.6
MISR_AM1_CGAS_0_5_DEG_mmm_yyyy_Fff_vvvv.nc MISR_AM1_CGAS_0_5_DEG_FIRSTLOOK_mmm_yyyy_Fff_vvvv.nc	MIL3MAEN MI3MAENF	§11. 2.6
MISR_AM1_CGAS_0_5_DEG_sss_yyyy_Fff_vvvv.nc	MIL3QAEN	§11. 2.6
MISR_AM1_CGAS_0_5_DEG_yyyy_Fff_vvvv.nc	MIL3YAEN	§11. 2.6
MISR_AM1_CGLS_0_5_DEG_mmm_dd_yyyy_Fff_vvvv.nc MISR_AM1_CGLS_0_5_DEG_FIRSTLOOK_mmm_dd_yyyy_Fff_vvvv.nc	MIL3DLSN MI3DLSNF	§11. 2.7
MISR_AM1_CGLS_0_5_DEG_mmm_yyyy_Fff_vvvv.nc MISR_AM1_CGLS_0_5_DEG_FIRSTLOOK_mmm_yyyy_Fff_vvvv.nc	MIL3MLSN MI3MLSNF	§11. 2.7
MISR_AM1_CGLS_0_5_DEG_sss_yyyy_Fff_vvvv.nc	MIL3QLSN	§11. 2.7
MISR_AM1_CGLS_0_5_DEG_yyyy_Fff_vvvv.nc	MIL3YLSN	§11. 2.7
MISR_AM1_CGAL_1_DEG_mmm_dd_yyyy_Fff_vvvv.nc MISR_AM1_CGAL_5_DEG_mmm_dd_yyyy_Fff_vvvv.nc MISR_AM1_CGAL_1_DEG_FIRSTLOOK_mmm_dd_yyyy_Fff_vvvv.nc MISR_AM1_CGAL_5_DEG_FIRSTLOOK_mmm_dd_yyyy_Fff_vvvv.nc	MIL3DALN MI3DALNF	§11. 2.8
MISR_AM1_CGAL_1_DEG_mmm_yyyy_Fff_vvvv.nc MISR_AM1_CGAL_5_DEG_mmm_yyyy_Fff_vvvv.nc MISR_AM1_CGAL_1_DEG_FIRSTLOOK_mmm_yyyy_Fff_vvvv.nc MISR_AM1_CGAL_5_DEG_FIRSTLOOK_mmm_yyyy_Fff_vvvv.nc	MIL3MALN MI3MALNF	§11. 2.8
MISR_AM1_CGAL_1_DEG_sss_yyyy_Fff_vvvv.nc MISR_AM1_CGAL_5_DEG_sss_yyyy_Fff_vvvv.nc	MIL3QALN	§11. 2.8
MISR_AM1_CGAL_1_DEG_yyyy_Fff_vvvv.nc MISR_AM1_CGAL_5_DEG_yyyy_Fff_vvvv.nc	MIL3YALN	§11. 2.8
MISR_AM1_CGCL_0_5_DEG_mmm_dd_yyyy_Fff_vvvv.nc MISR_AM1_CGCL_2_5_DEG_mmm_dd_yyyy_Fff_vvvv.nc MISR_AM1_CGCL_0_5_DEG_FIRSTLOOK_mmm_dd_yyyy_Fff_vvvv.nc MISR_AM1_CGCL_2_5_DEG_FIRSTLOOK_mmm_dd_yyyy_Fff_vvvv.nc	MI3DCLDN MI3DCDNF	§11. 2.9
MISR_AM1_CGCL_0_5_DEG_mmm_yyyy_Fff_vvvv.nc MISR_AM1_CGCL_2_5_DEG_mmm_yyyy_Fff_vvvv.nc MISR_AM1_CGCL_0_5_DEG_FIRSTLOOK_mmm_yyyy_Fff_vvvv.nc MISR_AM1_CGCL_2_5_DEG_FIRSTLOOK_mmm_yyyy_Fff_vvvv.nc	MI3MCLDN MI3MCDNF	§11. 2.9
MISR_AM1_CGCL_0_5_DEG_sss_yyyy_Fff_vvvv.nc MISR_AM1_CGCL_2_5_DEG_sss_yyyy_Fff_vvvv.nc	MI3QCLDN	§11. 2.9
MISR_AM1_CGCL_0_5_DEG_yyyy_Fff_vvvv.nc MISR_AM1_CGCL_2_5_DEG_yyyy_Fff_vvvv.nc	MI3YCLDN	§11. 2.9

11.2.2 MISR LEVEL 3 NETCDF COMPONENT PRODUCT GRANULE

BRIEF DESCRIPTIONS

Level 3 provides a global summary of Level 1 and Level 2 data. Level 1 and 2 parameters of interest are averaged over a day, month, season, or year and the results reported on a geographic grid, with resolution 0.5 degree by 0.5 degrees, 1 degree by 1 degree, 2.5 degree by 2.5 degree, or 5 degree by 5 degree — depending on the product.

11.2.3 MISR LEVEL 3 NETCDF COMPONENT PRODUCT GRANULE DATA SETS

The product will be produced as 20 separate ESDTs, each with one or two physical files, each of which contains all of the variables at a single resolution of the geographic grid (Table 11-2). There are five types of files, each reported on four time scales.

Each file contains the netCDF variables corresponding to the fields contained in a single HDF-EOS grid. Each grid is in a geographic projection, with a resolution of either 0.5 degree by 0.5 degree, 1 degree by 1 degree, 2.5 degree by 2.5 degree, or 5 degree by 5 degree.

11.2.4 DIFFERENCES BETWEEN FIRSTLOOK AND FINAL PROCESSING

The MISR processing stream has now been split up into two parts, "FIRSTLOOK" and "FINAL", to adjust for the new time dependence of the TASC and RCCT ancillary datasets. Both the TASC (Atmospheric and Surface Climatology) and RCCT (Radiometric Camera-by-Camea CloudMask Thresholds) datasets now contain data that is unique to the time period for which the datasets are constructed. The TASC dataset now contains snow-ice and ocean surface wind speed values that are updated on a monthly basis, and the RCCM Thresholds are now derived from the observations for a given 3-month period. Therefore, these datasets cannot be generated until the end of the month or season. Rather than delaying all MISR processing of Level 2 and Level 3 until these datasets are available, the Level 2 and Level 3 data are now produced twice over. These two different runs are given the names "FIRSTLOOK" and "FINAL". The FIRSTLOOK processing uses the TASC from the same month/previous year and the RCCT from the same season in the previous year. When the updated datasets are available, the FINAL processing which uses the correct RCCT and TASC data is run. The FIRSTLOOK products are distinguished by the presence of the "FIRSTLOOK" in the filenames, the FINAL products use the original filenames.

Table 11-2: Level 3 Global netCDF Product Files and Grid Datasets

ESDT	Local Granule ID[53]	Resolution

53 mmm" is the three-character month (one of "DEC", "JAN", "FEB", "MAR", "APR", "MAY", "JUN", "JUL", "AUG", "SEP", "OCT", "NOV"), "sss" is the season (one of "WIN", "SPR", "SUM", "FALL", corresponding to groups of three months starting with December), "dd" is the two-digit day (e.g., "03"),"yyyy" is the four-digit year (e.g., "2002"), "ff" is the format version number (e.g. "01"), and "vvvv" is the data version number (e.g., "0001")

Short name		(degree)
MIL3DRDN MI3DRDNF MIL3MRDN MI3MRDNF MIL3QRDN MIL3YRDN	MISR_AM1_CGGRP_0_5_DEG_mmm_dd_yyyy_Fff_vvvv.nc MISR_AM1_CGGRP_0_5_DEG_FIRSTLOOK_mmm_dd_yyyy_Fff_vvvv.nc MISR_AM1_CGGRP_0_5_DEG_mmm_yyyy_Fff_vvvv.nc MISR_AM1_CGGRP_0_5_DEG_FIRSTLOOK_mmm_yyyy_Fff_vvvv.nc MISR_AM1_CGGRP_0_5_DEG_sss_yyyy_Fff_vvvv.nc MISR_AM1_CGGRP_0_5_DEG_yyyy_Fff_vvvv.nc	0.5 x 0.5
MIL3DRDN MI3DRDNF MIL3MRDN MI3MRDNF MIL3QRDN MIL3YRDN	MISR_AM1_CGGRP_1_DEG_mmm_dd_yyyy_Fff_vvvv.nc MISR_AM1_CGGRP_1_DEG_FIRSTLOOK_mmm_dd_yyyy_Fff_vvvv.nc MISR_AM1_CGGRP_1_DEG_mmm_yyyy_Fff_vvvv.nc MISR_AM1_CGGRP_1_DEG_FIRSTLOOK_mmm_yyyy_Fff_vvvv.nc MISR_AM1_CGGRP_1_DEG_sss_yyyy_Fff_vvvv.nc MISR_AM1_CGGRP_1_DEG_yyyy_Fff_vvvv.nc	1.0 x 1.0
MIL3DAEN MI3DAENF MIL3MAEN MI3MAENF MIL3QAEN MIL3YAEN	MISR_AM1_CGAS_0_5_DEG_mmm_dd_yyyy_Fff_vvvv.nc MISR_AM1_CGAS_0_5_DEG_FIRSTLOOK_mmm_dd_yyyy_Fff_vvvv.nc MISR_AM1_CGAS_0_5_DEG_mmm_yyyy_Fff_vvvv.nc MISR_AM1_CGAS_0_5_DEG_FIRSTLOOK_mmm_yyyy_Fff_vvvv.nc MISR_AM1_CGAS_0_5_DEG_sss_yyyy_Fff_vvvv.nc MISR_AM1_CGAS_0_5_DEG_yyyy_Fff_vvvv.nc	0.5 x 0.5
MIL3DLSN MI3DLSNF MIL3MLSN MI3MLSNF MIL3QLSN MIL3YLSN	MISR_AM1_CGLS_0_5_DEG_mmm_dd_yyyy_Fff_vvvv.nc MISR_AM1_CGLS_0_5_DEG_FIRSTLOOK_mmm_dd_yyyy_Fff_vvvv.nc MISR_AM1_CGLS_0_5_DEG_mmm_yyyy_Fff_vvvv.nc MISR_AM1_CGLS_0_5_DEG_FIRSTLOOK_mmm_yyyy_Fff_vvvv.nc MISR_AM1_CGLS_0_5_DEG_sss_yyyy_Fff_vvvv.nc MISR_AM1_CGLS_0_5_DEG_yyyy_Fff_vvvv.nc	0.5 x 0.5
MIL3DALN MI3DALNF MIL3MALN MI3MALNF MIL3QALN MIL3YALN	MISR_AM1_CGAL_1_DEG_mmm_dd_yyyy_Fff_vvvv.nc MISR_AM1_CGAL_1_DEG_FIRSTLOOK_mmm_dd_yyyy_Fff_vvvv.nc MISR_AM1_CGAL_1_DEG_mmm_yyyy_Fff_vvvv.nc MISR_AM1_CGAL_1_DEG_FIRSTLOOK_mmm_yyyy_Fff_vvvv.nc MISR_AM1_CGAL_1_DEG_sss_yyyy_Fff_vvvv.nc MISR_AM1_CGAL_1_DEG_yyyy_Fff_vvvv.nc	1.0 x 1.0
MIL3DALN MI3DALNF MIL3MALN MI3MALNF MIL3QALN MIL3YALN	MISR_AM1_CGAL_5_DEG_mmm_dd_yyyy_Fff_vvvv.nc MISR_AM1_CGAL_5_DEG_FIRSTLOOK_mmm_dd_yyyy_Fff_vvvv.nc MISR_AM1_CGAL_5_DEG_mmm_yyyy_Fff_vvvv.nc MISR_AM1_CGAL_5_DEG_mmm_yyyy_Fff_vvvv.nc MISR_AM1_CGAL_5_DEG_sss_yyyy_Fff_vvvv.nc MISR_AM1_CGAL_5_DEG_yyyy_Fff_vvvv.nc	5.0 x 5.0
MI3DCLDN MI3DCDNF MI3MCLDN MI3MCDNF MI3QCLDN MI3YCLDN	MISR_AM1_CGCL_0_5_DEG_mmm_dd_yyyy_Fff_vvvv.nc MISR_AM1_CGCL_0_5_DEG_FIRSTLOOK_mmm_dd_yyyy_Fff_vvvv.nc MISR_AM1_CGCL_0_5_DEG_mmm_yyyy_Fff_vvvv.nc MISR_AM1_CGCL_0_5_DEG_FIRSTLOOK_mmm_yyyy_Fff_vvvv.nc MISR_AM1_CGCL_0_5_DEG_sss_yyyy_Fff_vvvv.nc MISR_AM1_CGCL_0_5_DEG_yyyy_Fff_vvvv.nc	0.5 x 0.5
MI3DCLDN MI3DCDNF MI3MCLDN MI3MCDNF MI3QCLDN MI3YCLDN	MISR_AM1_CGCL_2_5_DEG_mmm_dd_yyyy_Fff_vvvv.nc MISR_AM1_CGCL_2_5_DEG_FIRSTLOOK_mmm_dd_yyyy_Fff_vvvv.nc MISR_AM1_CGCL_2_5_DEG_mmm_yyyy_Fff_vvvv.nc MISR_AM1_CGCL_2_5_DEG_FIRSTLOOK_mmm_yyyy_Fff_vvvv.nc MISR_AM1_CGCL_2_5_DEG_sss_yyyy_Fff_vvvv.nc MISR_AM1_CGCL_2_5_DEG_yyyy_Fff_vvvv.nc	2.5 x 2.5

There is a standard set of variables (corresponding to the standard set of HDF vdatas) included in

each of the files. These variables contain metadata information and include the following types. For example, see Table 11-3.

1. There are four variables (corresponding to the HDF "Source file" vdata fields) that contain a description of the MISR Level 2 swath files that are summarized in the Level 3 product. These variables are Orbit_number, Path_number, Local_Granule_Id, and Local_version_Id. Each variable has a single dimension, Orbit_number, each element of which corresponds to a swath that is summarized in the Level 3 product.

2. There are two variables (corresponding to eight of the nine fields in the HDF "Time of Observations <Grid name>" vdata) which provide, respectively, the minute of the day of the observation and the orbit number of the MISR Level 2 swath file which contributed to each Level 3 grid cell for each day of the period included in the Level 3 file. Each of these variables has four dimensions: observation, timeobs, latitude, and longitude. The observation dimension is sized to be the maximum number of observations which occur for any grid cell for any day. There is one non-fill entry in each of the two variables for each observation. An "observation" is defined as a Level 2 swath, any part of which intersects the location and period of a Level 3 grid cell, and which is used to calculate a value of any of the Level 3 grid variables. The time of this observation is the average of the Level 2 block center time of the first and last Level 2 blocks which intersect the Level 3 grid cell.

3. For each dimension that appears in a netCDF variable, there is a coordinate variable, which by definition has the same name as the dimension. In the case of the time, latitude, and longitude dimensions, these contain the value of that dimension at the mid-point of each grid cell. There are corresponding time_bounds, latitude_bounds, and longitude_bounds variables, which are associated with their respective coordinate variable via the bounds attribute of that coordinate variable. These are of rank two with first dimension the same as that of their corresponding coordinate variable and second dimension of size two. These contain the lower and upper bounds of each grid cell in that dimension.

4. Dimensions other than those which are described above contained text strings in the HDF vdatas named "<Dimension name> Enumeration". The variables which contain these values in the netCDF files are named "<Dimension name>_labels". They are of rank two with first dimension the same as that of their corresponding coordinate variable and second dimension the size of the character arrays which they contain. They are associated with a coordinate variable via the coordinates and coord_labels attributes of that coordinate variable. This associated coordinate variable contains 1-based index values into that dimension. For example, several of the file types contain variables with the Band dimension. There is a coordinate variable, Band, which contains the values 1, 2, 3, and 4 (if the Band dimension is of size four). There is an associated variable, Band_labels, that contains the corresponding values "Blue_(443_nm)", "Green_(555_nm)", "Red_(670_nm)", and "Infrared_(865_nm)". This indicates that a 1-based Band dimension value of 1 is the blue band, a value of 2 is the green band, etc.

Each of the data variables include a time dimension. There is only one time value – the value of the center of the period that the Level 3 data summarizes. However, the time variable is still included for use by tools that expect to find a time variable in addition to the latitude and longitude (tools such as

vcdat from PCMDI).

11.2.5 MISR LEVEL 3 MIL3DRDN, MIL3MRDN, MIL3QRDN, MIL3YRDN COMPONENT GLOBAL GEORECTIFIED netCDF PRODUCT

The CGGRP netCDF products are not included in the current version of the Level 3 products. They are available as HDF-EOS products. The tables included here are placeholders for the future release of the CGGRP netCDF products and may be updated upon the release of those products.

11.2.5.1 CGGRP Metadata Variables

Table 11-3: CGGRP metadata variables[54]

Variable Name[55,56] (axis attribute)	Dimension List[57]	long_name attribute or description	Data Type	Units[58,59]	Valid Range[60]
Orbit_Number	Orbit_Number	Orbit numbers of MISR Level 2 files which are summarized in this Level 3 file.	INT32	count	1 to 999999 (valid_min only;

54 Units contains the value of the units attribute.
55 Each of the variables, period, time, latitude, longitude, and time, has the "bounds" attribute, whose value is the name of the associated bounds variable, respectively, period_bounds, latitude_bounds, longitude_bounds, and time_bounds.
56 The latitude and longitude variables each have the standard_name attribute, whose value is the name of the variable.
57 This is in C array order: the slowest-varying dimension is listed first and the fastest-varying dimension is listed last.
58 "count" is the Udunits unit defined as a "dimensionless decimal number". The UNIDATA Udunits package contains the set of units recognized by the NetCDF Climate and Forecast (CF) Metadata Conventions, V1.0.
59 Each of the variables, period, time, period_bounds, and time_bounds, has the "calendar" attribute with value "standard".
60 Though each variable has an associated fill value, it is not described in this document for these variables.

					valid_max omitted)
Path_Number	Orbit_Number	Orbital path numbers of MISR Level 2 files which are summarized in this Level 3 file.	INT16	count	1 to 233 (valid_min and valid_max)
Local_Granule_Id	Orbit_Number ,LocalGranule String (= 80)	Local Granule Id (file name) of MISR Level 2 files which are summarized in this Level 3 file. Only the DF terrain file is listed, since the other input files follow from this example file.	CHAR8	N/A	N/A
Local_Version_Id	Orbit_Number ,LocalVersion String (= 100)	Local Version Id (MISR_EXEC_VERSION (software version label) and MISR_EXEC_NAME (executable name)) used to produce each of the MISR Level 2 files which are summarized in this Level 3 file. Only DF terrain is listed.	CHAR8	N/A	N/A
time (axis = T)	time	Midpoint of the period summarized by this file.	FLOAT32	days since 2000-01-01 00:00:00	Varies with period of file.
latitude (axis = Y)	latitude	Midpoint of the latitude range summarized by each row of grid cells.	FLOAT32	degrees_north	Nominally -90.0 to 90.0
longitude (axis = X)	longitude	Midpoint of the longitude range summarized by each column of grid cells.	FLOAT32	degrees_east	Nominally -180.0 to 180.0
observation	observation	Observation within a grid cell for a day. (“Observations with a grid cell for a day.” was used)	INT8	count (“counts” was used)	>= 1
timeobs (axis = T)	timeobs	Midpoint of the day represented by each plane of grid cells of the Minute_of_day_of_observation and Orbit_number_of_observation variables.	FLOAT32	days since 2000-01-01 00:00:00	Varies with period of file.
time_bounds	time, Number_of_cell_vertices	Beginning and end of the period summarized by this file.	FLOAT32	days since 2000-01-01 00:00:00	Varies with period of file.
latitude_bounds	latitude, Number_of_cell_vertices	Upper and lower bound of *the latitude range summarized by each row of grid cells. (*”each” was used)	FLOAT32	degrees_north	Nominally -90.0 to 90.0
longitude_bounds	longitude, Number_of_cell_vertices	Upper and lower bound of *the longitude range summarized by each column of grid cells. (*”each” was used)	FLOAT32	degrees_east	Nominally -180.0 to 180.0
timeobs_bounds	timeobs, Number_of_cell_vertices	Beginning and end of the day represented by each plane of grid cells of the Minute_of_day_of_observation and Orbit_number_of_observation variables.	FLOAT32	days since 2000-01-01 00:00:00	Varies with period of file.
<Dimension	<Dimension	One-based index number.	INT32	NA	>= 1

61 <Dimension name> is a placeholder for each labeled dimension in file. For example, there is one variable named “Band” with associated label variable “Band_labels”, and another named “Camera” with associated label variable “Camera_labels”. See 11.2.5.2 for list of labeled dimensions.

name>[1]	name>[1]				
<Dimension name>[1]_label	<Dimension name>[1], DimensionString (= 60)	Meaning of each value in the dimension. For example, Band has 4 entries: “Blue_(443_nm)”, “Green_(555_nm)”, “Red_(670_nm)”, “Infrared_(865_nm)”.	CHAR8	N/A	N/A

11.2.5.2 CGGRP Labeled Dimension Variables

Table 11-4: CGGRP Labeled Dimension Variables

Coordinate Variable and Associated Label Variable[1]	long_name attribute of coordinate variable	Number of values	Values of Coordinate Variable (a) and Associated Label Variable (b): a = b
Camera, Camera_labels	MISR Camera	9	1 = Df, 2 = Cf, 3 = Bf, 4 = Af, 5 = An, 6 = Aa, 7 = Ba, 8 = Ca, 9 = Da
Band, Band_labels	MISR spectral band name and nominal center wavelength.	4	1 = Blue_(443_nm), 2 = Green_(555_nm), 3 = Red_(670_nm), 4 = Infrared_(865_nm)
CovarianceIndex, CovarianceIndex_labels	Index in covariance matrix	666	1 = Variance_Df_Blue_(443_nm), 2 = Covariance_Df_Blue_(443_nm),_Df_Green_(555_nm) 3 = Variance_Df_Green_(555_nm) ... This is all of the lower triangle entries of the covariance matrix.
RCCMCategory2, RCCMCategory2_labels	RCCM Categegory	5	0 = No retrieval 1 = High confidence cloudy 2 = Low confidence cloudy 3 = Low confidence clear 4 = High confidence clear

11.2.5.3 CGGRP_0_5_DEG Geographic Grid Variables

Table 11-5: CGGRP_0_5_DEG Geographic Grid Variables[2]

1 The coordinate variable has the “coordinates” and “coord_labels” attributes, whose value is the name of the associated label variable.

2 Units contains the value of the units attribute; valid_min and valid_max list the values of these attributes as min and max.

Variable Name long_name attribute[1]	Dimension List[2] cell_methods attribute[3]	Data Type	Units[4]	Fill Value[5] valid_min[6] valid_max
Resolution = 0.5 degree x 0.5 degree; number of latitude rows = 360, number of longitude columns = 720				
Average Average of radiances	Band, Camera, time, latitude, longitude	FLOAT32	$W\ m^{-2}\ sr^{-1}\ \mu m^{-1}$	-9999.0 = fill
Average_count Count of radiances used in average	Band, Camera, time, latitude, longitude	INT32	count	0 = fill
RCCM category count Histogram of RCCM results.	RCCMCategory2, Camera, time, latitude, longitude	INT32	N/A	N/A

11.2.5.4 CGGRP_1_DEG Geographic Grid Variables

Table 11-6: CGGRP_1_DEG Geographic Grid Variables[7]

Variable Name long_name attribute[8]	Dimension List[9] cell_methods attribute[10]	Data Type	Units[11]	Fill Value[12] valid_min[13] valid_max
Resolution = 1 degree x 1 degree; number of latitude rows = 180, number of longitude columns = 360				
Covariance Variance and covariances between radiances. This contains only the lower triangle of the symmetric covariance matrix.	CovarianceIndex, time, latitude, longitude	FLOAT32	$W^2\ m^{-4}\ sr^{-2}\ \mu m^{-2}$	0 = fill
Covariance_average_1 Average of the first radiance in the covariance.[14]	CovarianceIndex, time, latitude, longitude	FLOAT32	$W\ m^{-2}\ sr^{-1}\ \mu m^{-1}$	-9999.0 = fill

1 The long_name attribute values have not been changed from those of grid fields which exist in the corresponding table describing the HDF-EOS form of this product.
2 This is in C array order: the slowest-varying dimension is listed first and the fastest-varying dimension is listed last.
3 The cell_methods attribute value is not included.
4 "count" is the Udunits unit defined as a "dimensionless decimal number". The UNIDATA Udunits package contains the set of units recognized by the NetCDF Climate and Forecast (CF) Metadata Conventions, V1.0.
5 The same fill value is specified by the *_FillValue and missing*_value attributes for each variable.
6 The valid_min and valid_max attribute values are not included.
7 Units contains the value of the units attribute; valid_min and valid_max list the values of these attributes as min and max.
8 The long_name attribute values have not been changed from those of grid fields which exist in the corresponding table describing the HDF-EOS form of this product.
9 This is in C array order: the slowest-varying dimension is listed first and the fastest-varying dimension is listed last.
10 The cell_methods attribute value is not included.
11 "count" is the Udunits unit defined as a "dimensionless decimal number". The UNIDATA Udunits package contains the set of units recognized by the NetCDF Climate and Forecast (CF) Metadata Conventions, V1.0.
12 The same fill value is specified by the *_FillValue and missing*_value attributes for each variable.
13 The valid_min and valid_max attribute values are not included.
14 This is almost the same as the information in the "Average" field except: 1) it is reported on 1 degree by 1 degree grid rather than 0.5 degree by 0.5 degree and 2) only radiances where both the first and second radiance in the covariance are available are included, e.g. if this is for "Covariance Df Red, Cf Blue", then only radi ances where both the Df Red and Cf Blue are not fill are included.

Covariance_average_2 Average of the second radiance in the covariance.[14]	CovarianceIndex, time, latitude, longitude	FLOAT32	W m^{-2} sr^{-1} μm^{-1}	-9999.0 = fill
Covariance_count Count of radiance pairs that are used in covariance	CovarianceIndex, time, latitude, longitude	INT32	count	0 = fill

11.2.5.5 CGGRP_0_5_DEG Global Attributes

TBD.

11.2.5.6 CGGRP_1_DEG Global Attributes

TBD.

11.2.6 MISR LEVEL 3 MIL3DAEN, MIL3MAEN, MIL3QAEN, MIL3YAEN COMPONENT GLOBAL AEROSOL netCDF PRODUCT

11.2.6.1 CGAS Metadata Variables

Table 11-7: CGAS metadata variables[1]

Variable Name[2,3] (axis attribute)	Dimension List[4]	long_name attribute or description	Data Type	Units[5,6]	Valid Range[7]
Orbit_Number	Orbit_Number	Orbit numbers of MISR Level 2 files which are summarized in this Level 3 file.	INT32	count	1 to 999999 (valid_min only; valid_max omitted)
Path_Number	Orbit_Number	Orbital path numbers of MISR Level 2 files which are summarized in this Level 3 file.	INT16	count	1 to 233 (valid_min and valid_max)
Local_Granule_Id	Orbit_Number ,LocalGranuleString (= 80)	Local Granule Id (file name) of MISR Level 2 files which are summarized in this Level 3 file.	CHAR8	N/A	N/A

1 Units contains the value of the units attribute.
2 Each of the variables, period, time, latitude, longitude, and time, has the "bounds" attribute, whose value is the name of the associated bounds variable, respectively, period_bounds, latitude_bounds, longitude_bounds, and time_bounds.
3 The latitude and longitude variables each have the standard_name attribute, whose value is the name of the variable.
4 This is in C array order: the slowest-varying dimension is listed first and the fastest-varying dimension is listed last.
5 "count" is the Udunits unit defined as a "dimensionless decimal number". The UNIDATA Udunits package contains the set of units recognized by the NetCDF Climate and Forecast (CF) Metadata Conventions, V1.0.
6 Each of the variables, period, time, period_bounds, and time_bounds, has the "calendar" attribute with value "standard".
7 Though each variable has an associated fill value, it is not described in this document for these variables.

Local_Version_Id	Orbit_Number ,LocalVersionString (= 100)	Local Version Id (MISR_EXEC_VERSION (software version label) and MISR_EXEC_NAME (executable name)) used to produce each of the MISR Level 2 files which are summarized in this Level 3 file.	CHAR8	N/A	N/A
time (axis = T)	time	Midpoint of the period summarized by this file.	FLOAT32	days since 2000-01-01 00:00:00	Varies with period of file.
latitude (axis = Y)	latitude	Midpoint of the latitude range summarized by each row of grid cells.	FLOAT32	degrees_north	Nominally -90.0 to 90.0
longitude (axis = X)	longitude	Midpoint of the longitude range summarized by each column of grid cells.	FLOAT32	degrees_east	Nominally -180.0 to 180.0
observation	observation	Observation within a grid cell for a day. ("Observations with a grid cell for a day." was used)	INT8	count ("counts" was used)	>= 1
timeobs (axis = T)	timeobs	Midpoint of the day represented by each plane of grid cells of the Minute_of_day_of_observation and Orbit_number_of_observation variables.	FLOAT32	days since 2000-01-01 00:00:00	Varies with period of file.
time_bounds	time, Number_of_cell_vertices	Beginning and end of the period summarized by this file.	FLOAT32	days since 2000-01-01 00:00:00	Varies with period of file.
latitude_bounds	latitude, Number_of_cell_vertices	Upper and lower bound of *the latitude range summarized by each row of grid cells. (*"each" was used)	FLOAT32	degrees_north	Nominally -90.0 to 90.0
longitude_bounds	longitude, Number_of_cell_vertices	Upper and lower bound of *the longitude range summarized by each column of grid cells. (*"each" was used)	FLOAT32	degrees_east	Nominally -180.0 to 180.0
timeobs_bounds	timeobs, Number_of_cell_vertices	Beginning and end of the day represented by each plane of grid cells of the Minute_of_day_of_observation and Orbit_number_of_observation variables.	FLOAT32	days since 2000-01-01 00:00:00	Varies with period of file.
<Dimension name>[1]	<Dimension name>[1]	One-based index number.	INT32	NA	>= 1
<Dimension name>[1]_label	<Dimension name>[1], DimensionString (= 60)	Meaning of each value in the dimension. For example, Band has 4 entries: "Blue_(443_nm)", "Green_(555_nm)", "Red_(670_nm)", "Infrared_(865_nm)".	CHAR8	N/A	N/A

11.2.6.2 CGAS Labeled Dimension Variables

Table 11-8: CGAS Labeled Dimension Variables

[1] <Dimension name> is a placeholder for each labeled dimension in file. For example, there is a variable named "AlgorithmType" with associated label variable "AlgorithmType_labels". See 11.2.6.2 for list of labeled dimensions.

Coordinate Variable and Associated Label Variable[1]	long_name attribute of coordinate variable	Number of values	Values of Coordinate Variable (a) and Associated Label Variable (b): a = b
Band, Band_labels	MISR spectral band name and nominal center wavelength.	4	1 = Blue_(443_nm), 2 = Green_(555_nm), 3 = Red_(670_nm), 4 = Infrared_(865_nm)
AlgorithmType, AlgorithmType_labels	Flag of the algorithm type used by MISR Level 2 Aerosol processing to generate the aerosol optical depth for each 17.6 km x 17.6 km Region.	10	0 = No_retrieval, 1 = Dark_water_retrieval, 2 = Optically_thick_atmosphere_(OTA)_retrieval, 3 = Heterogeneous_land_retrieval, 4 = No_retrieval,_using_low_optical_depth_algorithm, 5 = No_retrieval,_using_optical_depth_in_previous_domain, 6 = No_retrieval,_using_Rayleigh_scattering_only_algorithm, 7 = No_retrieval,_using_optical_depth_upper_bound_algorithm 8 = Homogenous land retrieval 9 = Water Retrieval
OpticalDepth, OpticalDepth_labels	Optical Depth Range	9	0 = All 1 = < 0.05 2 = 0.05 – 0.15 3 = 0.15 – 0.25 4 = 0.25 – 0.4 5 = 0.4 – 0.6 6 = 0.6 – 0.8 7 = 0.8 – 1.0 8 = > 1.0
ParticleType, ParticleType_labels	Particle type	6	0 = All 1 = Small particle (< 0.35 micron radius) 2 = Medium particle (0.35 – 0.7 micron radius) 3 =Large particle (> 0.7 micron radius) 4 = Spherical particle 5 = Nonspherical particle
RetrievalSuccessType, RetrievalSuccessType_labels	Flag indicating retrieval success	2	0 = Successful Retrieval 1 = Failed Retrieval

[1] The coordinate variable has the "coordinates" and "coord_labels" attributes, whose value is the name of the associated label variable.

11.2.6.3 CGAS_0_5_DEG Geographic Grid Variables

Table 11-9: CGAS_0_5_DEG Geographic Grid Variables[1]

Variable Name long_name attribute	Dimension List[2] cell_methods attribute	Data Type	Units[3]	Fill Value[4] valid_min valid_max
Resolution = 0.5 degree x 0.5 degree; number of latitude rows = 360, number of longitude columns = 720				
Absorbing_optical_depth This is the absorbing optical depth. This is (1 – SSA) * AOD.	OpticalDepth,Band, time, latitude, longitude latitude: mean longitude: mean time: mean	FLOAT32	N/A	-9999.0 = fill
Algorithm_type_count Count of the MISR Level 2 Aerosol 17.6 km x 17.6 km Regions whose centers are within the Level 3 grid cell and which are processed with the algorithm type corresponding to the element of the AlgorithmType dimension of this variable.	AlgorithmType, time, latitude, longitude latitude: sum longitude: sum time: sum	INT32	count	0 = fill 0 = min N/A = max
Angstrom Exponent The angstrom exponent**.**	OpticalDepth, time, latitude, longitude latitude: mean longitude: mean time: mean	FLOAT32	NA	-9999 = fill
Optical_depth_average Average of aerosol optical depth for each of the MISR bands. This is a summary of the MISR Level 2 Aerosol RegMeanSpectralOptDepth field. RegMeanSpectralOptDepth: 17.6 km x 17.6 km Regional mean spectral optical depth, computed from optical depths of successful aerosol mixtures. (ATB eq. 82) For ATB reference, see the value of the referencesreferences Global Attribute.	OpticalDepth,Band, ParticleType, time, latitude, longitude latitude: mean longitude: mean time: mean	FLOAT32	N/A	-9999.0 = fill 0.0 = min 3.0 = max
Optical_depth_standard_deviation Standard deviation of aerosol optical depth for each of the MISR bands. This is a summary of the MISR Level 2 Aerosol RegMeanSpectralOptDepth field. RegMeanSpectralOptDepth: 17.6 km x 17.6 km Regional mean spectral optical depth, computed from optical depths of successful aerosol mixtures. (ATB eq. 82) For ATB reference, see the value of the references Global Attribute.	OpticalDepth,Band, ParticleType, time, latitude, longitude latitude: longitude: time: standard_deviation	FLOAT32	N/A	0.0 = fill 0.0 = min N/A = max
Optical_depth_average_count	OpticalDepth,Band,	INT32	count	0 = fill

1 Units contains the value of the units attribute; valid_min and valid_max list the values of these attributes as min and max.

2 This is in C array order: the slowest-varying dimension is listed first and the fastest-varying dimension is listed last.

3 "count" is the Udunits unit defined as a "dimensionless decimal number". The UNIDATA Udunits package contains the set of units recognized by the NetCDF Climate and Forecast (CF) Metadata Conventions, V1.0.

4 The same fill value is specified by the *_FillValue and missing*_value attributes for each variable.

Count of the MISR Level 2 Aerosol 17.6 km x 17..6 km Regions whose centers are within the Level 3 grid cell and which are used in the calculation of the corresponding element of the Optical_depth_average [*and Optical_depth_standard_deviation] variable[s]. (*omitted from attribute)	ParticleType,time, latitude, longitude latitude: sum longitude: sum time: sum			0 = min N/A = max
Single-scatter albedo The single-scatter albedo	Band, OpticalDepth, time, latitude, longitude latitude: mean longitude: mean time: mean	FLOAT32	NA	-9999 = fill
Single-scatter albedo count Count of optical depths used in single-scatter albedo	Band, OpticalDepth, time, latitude, longitude latitude: mean longitude: mean time: mean	INT32	NA	NA
Minute_of_day_of_observation Minute of day at which time any part of a Level 2 swath intersects the location and period of a Level 3 grid cell. The time of this observation is the average of the Level 2 block center time of the first and last Level 2 blocks which intersect the Level 3 grid cell.	observation, timeobs, time, latitude, longitude latitude: point longitude: point timeobs: point	INT16	minute	-9999 = fill 0 = min 1439 = max
Orbit_number_of_observation Orbit number of a Level 2 swath which intersects the location and period of a Level 3 grid cell.	observation, timeobs, time, latitude, longitude latitude: point longitude: point timeobs: point	INT32	count	-9999 = fill 1 = min 999999 = *max (*omitted)

11.2.6.4 CGAS_0_5_DEG Global Attributes

Table 11-10: CGAS_0_5_DEG Global Attributes

Attribute Name	Attribute Value or <Description>
Conventions	CF-1.0
title	MISR Level 3 <Daily, Monthly, Seasonal, Yearly> Component Global Aerosol Product for <period>, AerosolParameterAverage grid fields. Version Fff_vvvv
history	<production date and time>, produced by MISR Level 3 PGE software <LOCALVERSIONID attribute value (see below)>
institution	NASA Langley Atmospheric Sciences Data Center (ASDC)
source	Multi-angle Imaging SpectroRadiometer (MISR) on Terra, NASA's first Earth Observing System (EOS) spacecraft
references	MISR Data Sets: http://eosweb.larc.nasa.gov/PRODOCS/misr/table_misr.html MISR Data Products Specifications: http://eosweb.larc.nasa.gov/PRODOCS/misr/DPS/ MISR Level 3 Versioning: http://eosweb.larc.nasa.gov/PRODOCS/misr/Version/pge12c.html

	MISR Algorithm Theoretical Basis Documents (ATB): http://eospso.gsfc.nasa.gov/eos_homepage/for_scientists/atbd/viewInstrument.php?instrument=9 For MISR Level 2 Aerosol Retrieval ATB references in variable long_name attributes: http://eospso.gsfc.nasa.gov/eos_homepage/for_scientists/atbd/docs/MISR/ atbd-misr-09.pdf
comment	The MISR Level 3 Component Global Aerosol (CGAS) AerosolParameterAverage grid fields summarize selected MISR Level 2 Aerosol parameters. The Level 3 global summaries are reported on a rectangular, geographic grid that is 0.5 degree latitude by 0.5 degree longitude. The lower left corner of the grid is located at -90 S, -180 W. The center of the lower left corner grid cell is at -89.75 S, -179.75 W.
LOCALGRANULEID	See Table 11-2
LOCALVERSIONID	MISR_EXEC_VERSION: V4.1_i1_PGE12CP MISR_EXEC_NAME:pge12cp.cc
PGEVERSION	4.1
EASTBOUNDINGCOORDINATE	180.
WESTBOUNDINGCOORDINATE	-180.
SOUTHBOUNDINGCOORDINATE	-90.
NORTHBOUNDINGCOORDINATE	90.
RANGEENDINGDATE	<yyyy-mm-dd>
RANGEENDINGTIME	<hh:mm:ss.ssssss>
RANGEBEGINNINGDATE	<yyyy-mm-dd>
RANGEBEGINNINGTIME	<hh:mm:ss.ssssss>

11.2.7 MISR LEVEL 3 MIL3DLSN, MIL3MLSN, MIL3QLSN, MIL3YLSN COMPONENT GLOBAL LAND/SURFACE netCDF PRODUCT

11.2.7.1 CGLS Metadata Variables

Table 11-11: CGLS metadata variables[1]

Variable Name[2,3]	Dimension List[4]	long_name attribute or description	Data Type	Units[5,6]	Valid Range[7]

1 Units contains the value of the units attribute.
2 Each of the variables, period, time, latitude, longitude, and time, has the "bounds" attribute, whose value is the name of the associated bounds variable, respectively, period_bounds, latitude_bounds, longitude_bounds, and time_bounds.
3 The latitude and longitude variables each have the standard_name attribute, whose value is the name of the variable.
4 This is in C array order: the slowest-varying dimension is listed first and the fastest-varying dimension is listed last.
5 "count" is the Udunits unit defined as a "dimensionless decimal number". The UNIDATA Udunits package contains the set of units recognized by the NetCDF Climate and Forecast (CF) Metadata Conventions, V1.0.
6 Each of the variables, period, time, period_bounds, and time_bounds, has the "calendar" attribute with value "standard".
7 Though each variable has an associated fill value, it is not described in this document for these variables.

(axis attribute)					
Orbit_Number	Orbit_Number	Orbit numbers of MISR Level 2 files which are summarized in this Level 3 file.	INT32	count	1 to 999999 (valid_min only; valid_max omitted)
Path_Number	Orbit_Number	Orbital path numbers of MISR Level 2 files which are summarized in this Level 3 file.	INT16	count	1 to 233 (valid_min and valid_max)
Local_Granule_Id	Orbit_Number ,LocalGranuleString (= 80)	Local Granule Id (file name) of MISR Level 2 files which are summarized in this Level 3 file.	CHAR8	N/A	N/A
Local_Version_Id	Orbit_Number ,LocalVersionString (= 100)	Local Version Id (MISR_EXEC_VERSION (software version label) and MISR_EXEC_NAME (executable name)) used to produce each of the MISR Level 2 files which are summarized in this Level 3 file.	CHAR8	N/A	N/A
time (axis = T)	time	Midpoint of the period summarized by this file.	FLOAT32	days since 2000-01-01 00:00:00	Varies with period of file.
latitude (axis = Y)	latitude	Midpoint of the latitude range summarized by each row of grid cells.	FLOAT32	degrees_north	Nominally -90.0 to 90.0
longitude (axis = X)	longitude	Midpoint of the longitude range summarized by each column of grid cells.	FLOAT32	degrees_east	Nominally -180.0 to 180.0
observation	observation	Observation within a grid cell for a day. (“Observations with a grid cell for a day.” was used)	INT8	count (“counts” was used)	>= 1
timeobs (axis = T)	timeobs	Midpoint of the day represented by each plane of grid cells of the Minute_of_day_of_observation and Orbit_number_of_observation variables.	FLOAT32	days since 2000-01-01 00:00:00	Varies with period of file.
time_bounds	time, Number_of_cell_vertices	Beginning and end of the period summarized by this file.	FLOAT32	days since 2000-01-01 00:00:00	Varies with period of file.
latitude_bounds	latitude, Number_of_cell_vertices	Upper and lower bound of *the latitude range summarized by each row of grid cells. (*”each” was used)	FLOAT32	degrees_north	Nominally -90.0 to 90.0
longitude_bounds	longitude, Number_of_cell_vertices	Upper and lower bound of *the longitude range summarized by each column of grid cells. (*”each” was used)	FLOAT32	degrees_east	Nominally -180.0 to 180.0
timeobs_bounds	timeobs, Number_of_cell_vertices	Beginning and end of the day represented by each plane of grid cells of the Minute_of_day_of_observation and Orbit_number_of_observation variables.	FLOAT32	days since 2000-01-01 00:00:00	Varies with period of file.

<Dimension name>[1]	<Dimension name>[1]	One-based index number.	INT16	NA	>= 1
<Dimension name>[1]_label	<Dimension name>[1], DimensionString (= 60)	Meaning of each value in the dimension. For example, Band has 4 entries: "Blue_(443_nm)", "Green_(555_nm)", "Red_(670_nm)", "Infrared_(865_nm)".	CHAR8	N/A	N/A

11.2.7.2 CGLS Labeled Dimension Variables

Table 11-12: CGLS Labeled Dimension Variables

Coordinate Variable and Associated Label Variable[2]	long_name attribute of coordinate variable	Number of values	Values of Coordinate Variable (a) and Associated Label Variable (b): a = b
Band, Band_labels	MISR spectral band name and nominal center wavelength.	4	0 = Blue_(443_nm), 1 = Green_(555_nm), 2 = Red_(670_nm), 3 = Infrared_(865_nm)

11.2.7.3 CGLS_0_5_DEG Geographic Grid Variables

Table 11-13: CGLS_0_5_DEG Geographic Grid Variables[3]

Variable Name long_name attribute	Dimension List[4] cell_methods attribute	Data Type	Units[5,6]	Fill Value[7] valid_min valid_max
Resolution = 0.5 degree x 0.5 degree; number of latitude rows = 360, number of longitude columns = 720				
DHR_average Average of DHR (Directional-Hemispheric Reflectance). This is the spectral albedo of the surface in the absence of the atmosphere, defined as radiant exitance divided by irradiance under illumination from a single direction, also known as the black sky albedo. This is a summary of the MISR Level 2 Land Surface LandDHR field. LandDHR: 1.1 km x 1.1 km SubRegional directional-	Band, time, latitude, longitude latitude: mean longitude: mean time: mean	FLOAT32	N/A	-9999.0 = fill 0.0 = min 1.05 = max

1 <Dimension name> is a place holder for each labeled dimension in file. For example, there is a variable named "Band" with associated label variable "Band_labels". See 11.2.7.2 for list of labeled dimensions.

2 The coordinate variable has the "coordinates" and "coord_labels" attributes, whose value is the name of the associated label variable.

3 Units contains the value of the units attribute; valid_min and valid_max list the values of these attributes as min and max.

4 This is in C array order: the slowest-varying dimension is listed first and the fastest-varying dimension is listed last.

5 "count" is the Udunits unit defined as a "dimensionless decimal number". The UNIDATA Udunits package contains the set of units recognized by the NetCDF Climate and Forecast (CF) Metadata Conventions, V1.0.

6 "1" is the NetCDF Climate and Forecast (CF) Metadata Conventions, V1.0 conforming unit for quantities that represent fractions or parts of a whole.

7 The same fill value is specified by the *_FillValue and missing*_value attributes for each variable.

hemispherical reflectance (DHR), which is the hemispherically integrated LandBRF. (ATB eq. 87) [*For ATB reference, see the value of the references Global Attribute.] (*omitted)				
DHR_average_count Count of the MISR Level 2 Land Surface 1.1 km x 1.1 km SubRegions whose centers are within the Level 3 grid cell and which are used in the calculation of the corresponding element of the DHR_average variable.	Band, time, latitude, longitude latitude: sum longitude: sum time: sum	INT32	count	0 = fill 0 = min N/A = max
DHRPAR_average Average of DHR integrated over the Photosynthetically Active Radiation (PAR) band. This is a summary of the MISR Level 2 Land Surface DHRPAR field. DHRPAR: 1.1 km x 1.1 km SubRegional DHR in the photosynthetically active radiation (PAR) regime, 400 - 700 nm. (ATB eq. 100) [*For ATB reference, see the value of the references Global Attribute.] (*omitted)	time, latitude, longitude latitude: mean longitude: mean time: mean	FLOAT32	1	-9999.0 = fill 0.0 = min 1.0 = max
DHRPAR_count Count of the MISR Level 2 Land Surface 1.1 km x 1.1 km SubRegions whose centers are within the Level 3 grid cell and which are used in the calculation of the corresponding element of the DHRPAR_average variable.	time, latitude, longitude latitude: sum longitude: sum time: sum	INT32	count	0 = fill 0 = min N/A = max
DHR_Shortwave_approximation_average Average of DHR for a broad shortwave band (400-2500 nm), approximated from visible bands. Derived from a linear combination of MISR bands found in MISR Level 2 Land Surface LandDHR field. See Hemispherical reflectance and albedo estimates from the accumulation of across-track sun-synchronous satellite data, Weiss M, Baret F, Leroy M, Begue A, Hautecoeur O, Santer R, Journal of Geophysical Research-Atmospheres 104: (D18) 22221-22232 September 27 1999. LandDHR: 1.1 km x 1.1 km SubRegional directional-hemispherical reflectance (DHR), which is the hemispherically integrated LandBRF. (ATB eq. 87) [*For ATB reference, see the value of the referencesreferences Global Attribute.] (*omitted)	time, latitude, longitude latitude: mean longitude: mean time: mean	FLOAT32	1	-9999.0 = fill 0.0 = min 1.0 = max
DHR_Shortwave_approximation_average_count Count of the MISR Level 2 Land Surface 1.1 km x 1.1 km SubRegions whose centers are within the Level 3 grid cell and which are used in the calculation of the corresponding element of the DHR_Shortwave_approximation_ average variable.	time, latitude, longitude latitude: sum longitude: sum time: sum	INT32	count	0 = fill 0 = min N/A = max
FPAR_average Average of Fractional absorbed Photosynthetically Active Radiation (FPAR). Defined as PAR irradiance absorbed by live vegetation divided by incident PAR irradiance. This is a summary of the MISR Level 2 Land Surface FPARBestEstimate field. FPARBestEstimate: 1.1 km x 1.1 km SubRegional best estimate of FPAR. (ATB eq. 144) [*For ATB reference, see the value of the referencesreferences Global Attribute.] (*omitted)	time, latitude, longitude latitude: mean longitude: mean time: mean	FLOAT32	1	-9999.0 = fill 0.0 = min 1.0 = max

FPAR_average_count Count of the MISR Level 2 Land Surface 1.1 km x 1.1 km SubRegions whose centers are within the Level 3 grid cell and which are used in the calculation of the corresponding element of the FPAR_average variable.	time, latitude, longitude latitude: sum longitude: sum time: sum	INT32	count	0 = fill 0 = min N/A = max
LAI_average Average of Leaf Area Index (LAI). This is a summary of the MISR Level 2 Land Surface LAIBestEstimate. LAIBestEstimate: Best estimate of LAI, equal to LAIMean2 for BiomeBestEstimate. (ATB sec. 3.3.7.4) LAIMean2: 1.1 km x 1.1 km SubRegional mean LAI, second test (6 biomes). (ATB eq. 125) [*For ATB reference, see the value of the referencesreferences Global Attribute.] (*omitted)	time, latitude, longitude latitude: mean longitude: mean time: mean	FLOAT32	N/A	-9999.0 = fill 0.0 = min 11.0 = max
LAI_average_count Count of the MISR Level 2 Land Surface 1.1 km x 1.1 km SubRegions whose centers are within the Level 3 grid cell and which are used in the calculation of the corresponding element of the LAI_average variable.	time, latitude, longitude latitude: sum longitude: sum time: sum	INT32	count	0 = fill 0 = min N/A = max
NDVI_average Average of Normalized Difference Vegetation Index (NDVI). This is a summary of the MISR Level 2 Land Surface NDVI field. NDVI: 1.1 km x 1.1 km SubRegional Normalized Difference Vegetation Index. (ATB eq. 101) [*For ATB reference, see the value of the referencesreferences Global Attribute.] (*omitted)	time, latitude, longitude latitude: mean longitude: mean time: mean	FLOAT32	N/A	-9999.0 = fill -1.0 = min (0.0 was used) 1.0 = *max (*omitted)
NDVI_average_count Count of the MISR Level 2 Land Surface 1.1 km x 1.1 km SubRegions whose centers are within the Level 3 grid cell and which are used in the calculation of the corresponding element of the NDVI_average variable.	time, latitude, longitude latitude: sum longitude: sum time: sum	INT32	count	0 = fill 0 = min N/A = max
Minute_of_day_of_observation Minute of day at which time any part of a Level 2 swath intersects the location and period of a Level 3 grid cell. The time of this observation is the average of the Level 2 block center time of the first and last Level 2 blocks which intersect the Level 3 grid cell.	observation, timeobs, time, latitude, longitude latitude: point longitude: point timeobs: point	INT16	minute	-9999 = fill 0 = min 1439 = max
Orbit_number_of_observation Orbit number of a Level 2 swath which intersects the location and period of a Level 3 grid cell.	observation, timeobs, time, latitude, longitude latitude: point longitude: point timeobs: point	INT32	count	-9999 = fill 1 = min 999999 = *max (*omitted)

11.2.7.4 CGLS_0_5_DEG Global Attributes

Table 11-14: CGLS_0_5_DEG Global Attributes

Attribute Name	Attribute Value or <Description>
Conventions	CF-1.0

title	MISR Level 3 <Daily, Monthly, Seasonal, Yearly> Component Global Land *Surface Product for <period>, LandParameterAverage grid fields. Version Fff_vvvv (*"Surface" was omitted)
history	<production date and time>, produced by MISR Level 3 PGE software <LOCALVERSIONID attribute value (see below)>
institution	NASA Langley Atmospheric Sciences Data Center (ASDC)
source	Multi-angle Imaging SpectroRadiometer (MISR) on Terra, NASA's first Earth Observing System (EOS) spacecraft
references	MISR Data Sets: http://eosweb.larc.nasa.gov/PRODOCS/misr/table_misr.html MISR Data Products Specifications: http://eosweb.larc.nasa.gov/PRODOCS/misr/DPS/ MISR Level 3 Versioning: http://eosweb.larc.nasa.gov/PRODOCS/misr/Version/pge12c.html MISR Algorithm Theoretical Basis Documents (ATB): http://eospso.gsfc.nasa.gov/eos_homepage/for_scientists/atbd/viewInstrument.php?instrument=9 For MISR Level 2 Surface Retrieval ATB references in variable long_name attributes: http://eospso.gsfc.nasa.gov/eos_homepage/for_scientists/atbd/docs/MISR/atbd-misr-10.pdf
comment	The MISR Level 3 Component Global Land Surface (CGLS) LandParameterAverage grid fields summarize selected MISR Level 2 Surface parameters. The Level 3 global summaries are reported on a rectangular, geographic grid that is 0.5 degree latitude by 0.5 degree longitude. The lower left corner of the grid is located at -90 S, -180 W. The center of the lower left corner grid cell is at -89.75 S, -179.75 W.
LOCALGRANULEID	See Table 11-2
LOCALVERSIONID	MISR_EXEC_VERSION: V4.1_i1_PGE12CP MISR_EXEC_NAME:pge12cp.cc
PGEVERSION	4.1
EASTBOUNDINGCOORDINATE	180.
WESTBOUNDINGCOORDINATE	-180.
SOUTHBOUNDINGCOORDINATE	-90.
NORTHBOUNDINGCOORDINATE	90.
RANGEENDINGDATE	<yyyy-mm-dd>
RANGEENDINGTIME	<hh:mm:ss.ssssss>
RANGEBEGINNINGDATE	<yyyy-mm-dd>
RANGEBEGINNINGTIME	<hh:mm:ss.ssssss>

11.2.8 MISR LEVEL 3 MIL3DALN, MIL3MALN, MIL3QALN, MIL3YALN COMPONENT GLOBAL ALBEDO netCDF PRODUCT

11.2.8.1 CGAL Metadata Variables

Table 11-15: CGAL metadata variables[1]

Variable Name[2,3] (axis attribute)	Dimension List[4]	long_name attribute or description	Data Type	Units[5,6]	Valid Range[7]
Orbit_Number	Orbit_Number	Orbit numbers of MISR Level 2 files which are summarized in this Level 3 file.	INT32	count	1 to 999999 (valid_min only; valid_max omitted)
Path_Number	Orbit_Number	Orbital path numbers of MISR Level 2 files which are summarized in this Level 3 file.	INT16	count	1 to 233 (valid_min and valid_max)
Local_Granule_Id	Orbit_Number ,LocalGranuleString (= 80)	Local Granule Id (file name) of MISR Level 2 files which are summarized in this Level 3 file.	CHAR8	N/A	N/A
Local_Version_Id	Orbit_Number ,LocalVersionString (= 100)	Local Version Id (MISR_EXEC_VERSION (software version label) and MISR_EXEC_NAME (executable name)) used to produce each of the MISR Level 2 files which are summarized in this Level 3 file.	CHAR8	N/A	N/A
time (axis = T)	time	Midpoint of the period summarized by this file.	FLOAT32	days since 2000-01-01 00:00:00	Varies with period of file.
latitude (axis = Y)	latitude	Midpoint of the latitude range summarized by each row of grid cells.	FLOAT32	degrees_north	Nominally -90.0 to 90.0
longitude (axis = X)	longitude	Midpoint of the longitude range summarized by each column of grid cells.	FLOAT32	degrees_east	Nominally -180.0 to 180.0

1 Units contains the value of the units attribute.
2 Each of the variables, period, time, latitude, longitude, and time, has the "bounds" attribute, whose value is the name of the associated bounds variable, respectively, period_bounds, latitude_bounds, longitude_bounds, and time_bounds.
3 The latitude and longitude variables each have the standard_name attribute, whose value is the name of the variable.
4 This is in C array order: the slowest-varying dimension is listed first and the fastest-varying dimension is listed last.
5 "count" is the Udunits unit defined as a "dimensionless decimal number". The UNIDATA Udunits package contains the set of units recognized by the NetCDF Climate and Forecast (CF) Metadata Conventions, V1.0.
6 Each of the variables, period, time, period_bounds, and time_bounds, has the "calendar" attribute with value "standard".
7 Though each variable has an associated fill value, it is not described in this document for these variables.

observation	observation	Observation within a grid cell for a day. (“Observations with a grid cell for a day.” was used)	INT8	count (“counts” was used)	>= 1
timeobs (axis = T)	timeobs	Midpoint of the day represented by each plane of grid cells of the Minute_of_day_of_observation and Orbit_number_of_observation variables.	FLOAT32	days since 2000-01-01 00:00:00	Varies with period of file.
time_bounds	time, Number_of_cell_vertices	Beginning and end of the period summarized by this file.	FLOAT32	days since 2000-01-01 00:00:00	Varies with period of file.
latitude_bounds	latitude, Number_of_cell_vertices	Upper and lower bound of *the latitude range summarized by each row of grid cells. (*”each” was used)	FLOAT32	degrees_north	Nominally -90.0 to 90.0
longitude_bounds	longitude, Number_of_cell_vertices	Upper and lower bound of *the longitude range summarized by each column of grid cells. (*”each” was used)	FLOAT32	degrees_east	Nominally -180.0 to 180.0
timeobs_bounds	timeobs, Number_of_cell_vertices	Beginning and end of the day represented by each plane of grid cells of the Minute_of_day_of_observation and Orbit_number_of_observation variables.	FLOAT32	days since 2000-01-01 00:00:00	Varies with period of file.
<Dimension name>[1]	<Dimension name>[1]	One-based index number.	INT32	NA	>= 1
<Dimension name>[1]_label	<Dimension name>[1], DimensionString (= 60)	Meaning of each value in the dimension. For example, Band has 4 entries: “Blue_(443_nm)”, “Green_(555_nm)”, “Red_(670_nm)”, “Infrared_(865_nm)”.	CHAR8	N/A	N/A

11.2.8.2 CGAL Labeled Dimension Variables

Table 11-16: CGAL Labeled Dimension Variables

Coordinate Variable and Associated Label Variable[2]	long_name attribute of coordinate variable	Number of values	Values of Coordinate Variable (a) and Associated Label Variable (b): a = b
Band, Band_labels	MISR spectral band name and nominal center wavelength, and broadband approximation.	5	0 = Blue_(443_nm), 1 = Green_(555_nm), 2 = Red_(670_nm), 3 = Infrared_(865_nm) 4 = Broadband

1 <Dimension name> is a placeholder for each labeled dimension in file. For example, there is a variable named “Band” with associated label variable “Band_labels”. See 11.2.8.2 for list of labeled dimensions.

2 The coordinate variable has the “coordinates” and “coord_labels” attributes, whose value is the name of the associated label variable.

11.2.8.3 CGAL_1_DEG Geographic Grid Variables

Table 11-17: CGAL_1_DEG Geographic Grid Variables[1]

Variable Name long_name attribute	Dimension List[2] cell_methods attribute	Data Type	Units[3,4]	Fill Value[5] valid_min valid_max
Resolution = 1 degree x 1 degree; number of latitude rows = 180, number of longitude columns = 360				
Swath_count Count of the MISR Level 2 Cloud Albedo swaths which contain data used in the calculation of a Level 3 grid cell.	time, latitude, longitude latitude: sum longitude: sum time: sum	INT32	count	N/A 0 = min N/A = max
Expansive_albedo_average Average of expansive albedo. This is the average of the reflected flux divided by the average solar insolation, not a direct average of the Level 2 Albedos. This is the albedo that would be measured at a 30 km altitude, encompassing reflection from the entire scene viewable from that point. The Level 2 product that this variable summarizes provides the best estimate of top of atmosphere (TOA) energetics for the region. This is a summary of the MISR Level 2 Cloud Albedo 35.2 km x 35.2 km Regional fields, AlbedoExpansive and AlbedoExpansiveBroadband. AlbedoExpansive: Expansive albedo (four bands). AlbedoExpansiveBroadband: Broadband albedo calculated from a linear combination of all four spectral Expansive Albedo measurements.	Band, time, latitude, longitude latitude: mean longitude: mean time: mean (The contributing Level 2 pixels from each swath are first averaged; these swath averages are then averaged to form the mean.)	FLOAT32	1	-9999.0 = fill 0.0 = min 1.0 = max
Expansive_albedo_first_moment Average of expansive albedo. This is a direct average of the Level 2 Albedos. This is the albedo that would be measured at a 30 km altitude, encompassing reflection from the entire scene viewable from that point. The Level 2 product that this variable summarizes provides the best estimate of top of atmosphere (TOA) energetics for the region. This is a summary of the MISR Level 2 Cloud Albedo 35.2 km x 35.2 km Regional fields, AlbedoExpansive and AlbedoExpansiveBroadband. AlbedoExpansive: Expansive albedo (four bands). AlbedoExpansiveBroadband: Broadband albedo calculated from a linear combination of all four spectral Expansive Albedo measurements.	Band, time, latitude, longitude latitude: mean longitude: mean time: mean (The contributing Level 2 pixels from each swath are first averaged; these swath averages are then averaged to form the mean.)	FLOAT32	1	-9999.0 = fill 0.0 = min 1.0 = max

1 Units contains the value of the units attribute; valid_min and valid_max list the values of these attributes as min and max.

2 This is in C array order: the slowest-varying dimension is listed first and the fastest-varying dimension is listed last.

3 "count" is the Udunits unit defined as a "dimensionless decimal number". The UNIDATA Udunits package contains the set of units recognized by the NetCDF Climate and Forecast (CF) Metadata Conventions, V1.0.

4 "1" is the NetCDF Climate and Forecast (CF) Metadata Conventions, V1.0 conforming unit for quantities that represent fractions or parts of a whole.

5 The same fill value is specified by the *_FillValue and missing_*value attributes for each variable.

Expansive_albedo_standard_deviation Standard deviation of expansive albedo. This is the albedo that would be measured at a 30 km altitude, encompassing reflection from the entire scene viewable from that point. The Level 2 product that this variable summarizes provides the best estimate of top of atmosphere (TOA) energetics for the region. This is a summary of the MISR Level 2 Cloud Albedo 35.2 km x 35.2 km Regional fields, AlbedoExpansive and AlbedoExpansiveBroadband. AlbedoExpansive: Expansive albedo (four bands). AlbedoExpansiveBroadband: Broadband albedo calculated from a linear combination of all four spectral Expansive Albedo measurements.	Band, time, latitude, longitude latitude: longitude: time: standard_deviation (This is the standard deviation of the swath averages which are averaged to form the direct average of the Level 2 Albedos in variable *Expansive_albedo_ first _moment.) (*Expansive_albedo _first_moment_1_de g" was used)	FLOAT32	1	-9999.0 = fill 0.0 = min N/A = max
Expansive_albedo_solar_insolation Average solar insolation of pixels that contribute to Expansive albedo average. This is the albedo that would be measured at a 30 km altitude, encompassing reflection from the entire scene viewable from that point. The Level 2 product that this variable summarizes provides the best estimate of top of atmosphere (TOA) energetics for the region. This is a summary of the MISR Level 2 Cloud Albedo 35.2 km x 35.2 km Regional fields, AlbedoExpansive and AlbedoExpansiveBroadband. AlbedoExpansive: Expansive albedo (four bands). AlbedoExpansiveBroadband: Broadband albedo calculated from a linear combination of all four spectral Expansive Albedo measurements. [All but first sentence omitted.]	Band, time, latitude, longitude latitude: mean longitude: mean time: mean (The contributing Level 2 pixels from each swath are first averaged; these swath averages are then averaged to form the mean.)	FLOAT32	$\frac{W}{m^2 \mu m}$	-9999.0 = fill 0.0 = min N/A = max
Expansive_albedo_swath_count Count of the MISR Level 2 Cloud Albedo swaths which contain 35.2 km x 35.2 km Regions whose centers are within the Level 3 grid cell and which are used in the calculation of the corresponding element of the *Expansive_albedo_average variable. (*"Expansive_albedo_average_1_deg" was used)	Band, time, latitude, longitude latitude: sum longitude: sum time: sum	INT32	count	0 = fill 0 = min N/A = max
Local_albedo_average Average of local albedo. This is the average of the reflected flux divided by the average solar insolation, not a direct average of the Level 2 Albedos. This is a specialized product that provides the unobscured portion of reflected irradiance averaged at Level 2 over a 2.2 km subregion (normalized by incident top of atmosphere (TOA) irradiance). Because of obscuration by higher neighboring subregions, the local albedo may be highly variable for heterogeneous clouds, and attention must be given to the associated obscuration factors. This is a summary of the MISR Level 2 Cloud Albedo	Band, time, latitude, longitude latitude: mean longitude: mean time: mean (The contributing Level 2 pixels from each swath are first averaged; these swath averages are then averaged to form the mean.)	FLOAT32	1	-9999.0 = fill 0.0 = min 1.0 = max

AlbedoLocal field. AlbedoLocal: 2.2 km x 2.2 km SubRegional Local TOA albedo (four bands).				
Local_albedo_first_moment Average of local albedo. This is a direct average of the Level 2 Albedos. This is a specialized product that provides the unobscured portion of reflected irradiance averaged at Level 2 over a 2.2 km subregion (normalized by incident top of atmosphere (TOA) irradiance). Because of obscuration by higher neighboring subregions, the local albedo may be highly variable for heterogeneous clouds, and attention must be given to the associated obscuration factors. This is a summary of the MISR Level 2 Cloud Albedo AlbedoLocal field. AlbedoLocal: 2.2 km x 2.2 km SubRegional Local TOA albedo (four bands).	Band, time, latitude, longitude latitude: mean longitude: mean time: mean (The contributing Level 2 pixels from each swath are first averaged; these swath averages are then averaged to form the mean.)	FLOAT32	1	-9999.0 = fill 0.0 = min 1.0 = max
Local_albedo_standard_deviation Standard deviation of local albedos. This is a specialized product that provides the unobscured portion of reflected irradiance averaged at Level 2 over a 2.2 km subregion (normalized by incident top of atmosphere (TOA) irradiance). Because of obscuration by higher neighboring subregions, the local albedo may be highly variable for heterogeneous clouds, and attention must be given to the associated obscuration factors. This is a summary of the MISR Level 2 Cloud Albedo AlbedoLocal field. AlbedoLocal: 2.2 km x 2.2 km SubRegional Local TOA albedo (four bands).	Band, time, latitude, longitude latitude: longitude: time: standard_deviation (This is the standard deviation of the swath averages which are averaged to form the direct average of the Level 2 Albedos in variable *Local_albedo_first_moment.) (*Local_albedo_first_moment_1_deg" was used)	FLOAT32	1	-9999.0 = fill 0.0 = min N/A = max
Local_albedo_solar_insolation Average solar insolation of pixels that contribute to Local albedo average. This is a specialized product that provides the unobscured portion of reflected irradiance averaged at Level 2 over a 2.2 km subregion (normalized by incident top of atmosphere (TOA) irradiance). Because of obscuration by higher neighboring subregions, the local albedo may be highly variable for heterogeneous clouds, and attention must be given to the associated obscuration factors. This is a summary of the MISR Level 2 Cloud Albedo AlbedoLocal field. AlbedoLocal: 2.2 km x 2.2 km SubRegional Local TOA albedo (four bands).	Band, time, latitude, longitude latitude: mean longitude: mean time: mean (The contributing Level 2 pixels from each swath are first averaged; these swath averages are then averaged to form the mean.)	FLOAT32	$\frac{W}{m^2 \mu m}$	-9999.0 = fill 0.0 = min N/A = max
Local_albedo_swath_count Count of the MISR Level 2 Cloud Albedo swaths which contain 2.2 km x 2.2 km SubRegions whose centers are	Band, time, latitude, longitude latitude: sum	INT32	count	0 = fill 0 = min N/A = max

within the Level 3 grid cell and which are used in the calculation of the corresponding element of the *Local_albedo_average variable. (*"Local_albedo_average_1_deg" was used)	longitude: sum time: sum			
Restrictive_albedo_average Average of restrictive albedo. This is the average of the reflected flux divided by the average solar insolation, not a direct average of the Level 2 Albedos. This is an ERBE-like albedo. The Level 2 data is produced by averaging over 35.2 km x 35.2 km Regions at a level close to the reflecting surface, without regard to adjacent regions. This differs from the expansive albedo when the scenes are heterogeneous over large areas. This is a summary of the MISR Level 2 Cloud Albedo 35.2 km x 35.2 km Regional fields, AlbedoRestrictive and AlbedoRestrictiveBroadband AlbedoRestrictive: Restrictive albedo (four bands). AlbedoRestrictiveBroadband: Broadband albedo calculated from a linear combination of all four spectral Restrictive Albedo measurements.	Band, time, latitude, longitude latitude: mean longitude: mean time: mean (The contributing Level 2 pixels from each swath are first averaged; these swath averages are then averaged to form the mean.)	FLOAT32	1	-9999.0 = fill 0.0 = min 1.0 = max
Restrictive_albedo_first_moment Average of restrictive albedo. This is a direct average of the Level 2 Albedos. This is an ERBE-like albedo. The Level 2 data is produced by averaging over 35.2 km x 35.2 km Regions at a level close to the reflecting surface, without regard to adjacent regions. This differs from the expansive albedo when the scenes are heterogeneous over large areas. This is a summary of the MISR Level 2 Cloud Albedo 35.2 km x 35.2 km Regional fields, AlbedoRestrictive and AlbedoRestrictiveBroadband AlbedoRestrictive: Restrictive albedo (four bands). AlbedoRestrictiveBroadband: Broadband albedo calculated from a linear combination of all four spectral Restrictive Albedo measurements.	Band, time, latitude, longitude latitude: mean longitude: mean time: mean (The contributing Level 2 pixels from each swath are first averaged; these swath averages are then averaged to form the mean.)	FLOAT32	1	-9999.0 = fill 0.0 = min 1.0 = max
Restrictive_albedo_standard_deviation Standard deviation of restrictive albedo. This is an ERBE-like albedo. The Level 2 data is produced by averaging over 35.2 km x 35.2 km Regions at a level close to the reflecting surface, without regard to adjacent regions. This differs from the expansive albedo when the scenes are heterogeneous over large areas. This is a summary of the MISR Level 2 Cloud Albedo 35.2 km x 35.2 km Regional fields, AlbedoRestrictive and AlbedoRestrictiveBroadband AlbedoRestrictive: Restrictive albedo (four bands). AlbedoRestrictiveBroadband: Broadband albedo calculated from a linear combination of all four spectral Restrictive Albedo measurements.	Band, time, latitude, longitude atitude: longitude: time: standard_deviation (This is the standard deviation of the swath averages which are averaged to form the direct average of the Level 2 Albedos in variable *Restrictive_albedo_first _moment.) (*"Restrictive_albedo_first	FLOAT32	1	-9999.0 = fill 0.0 = min N/A = max

	_moment_1_deg" was used)			
Restrictive_albedo_solar_insolation Average solar insolation of pixels that contribute to restrictive albedo average. This is an ERBE-like albedo. The Level 2 data is produced by averaging over 35.2 km x 35.2 km Regions at a level close to the reflecting surface, without regard to adjacent regions. This differs from the expansive albedo when the scenes are heterogeneous over large areas. This is a summary of the MISR Level 2 Cloud Albedo 35.2 km x 35.2 km Regional fields, AlbedoRestrictive and AlbedoRestrictiveBroadband AlbedoRestrictive: Restrictive albedo (four bands). AlbedoRestrictiveBroadband: Broadband albedo calculated from a linear combination of all four spectral Restrictive Albedo measurements.	Band, time, latitude, longitude latitude: mean longitude: mean time: mean (The contributing Level 2 pixels from each swath are first averaged; these swath averages are then averaged to form the mean.)	FLOAT32	$\frac{W}{m^2 \mu m}$	-9999.0 = fill 0.0 = min N/A = max
Restrictive_albedo_swath_count Count of the MISR Level 2 Cloud Albedo swaths which contain 35.2 km x 35.2 km Regions whose centers are within the Level 3 grid cell and which are used in the calculation of the corresponding element of the *Restrictive_albedo_average variable. (*"Restrictive_albedo_average_1_deg" was used)	Band, time, latitude, longitude latitude: sum longitude: sum time: sum	INT32	count	0 = fill 0 = min N/A = max
Minute_of_day_of_observation Minute of day at which time any part of a Level 2 swath intersects the location and period of a Level 3 grid cell. The time of this observation is the average of the Level 2 block center time of the first and last Level 2 blocks which intersect the Level 3 grid cell.	observation, timeobs, time, latitude, longitude latitude: point longitude: point timeobs: point	INT16	minute	-9999 = fill 0 = min 1439 = max
Orbit_number_of_observation Orbit number of a Level 2 swath which intersects the location and period of a Level 3 grid cell.	observation, timeobs, time, latitude, longitude latitude: point longitude: point timeobs: point	INT32	count	-9999 = fill 1 = min 999999 = *max (*omitted)

11.2.8.4 CGAL_5_DEG Geographic Grid Variables

Table 11-18: CGAL_5_DEG Geographic Grid Variables[1]

Variable Name	Dimension List[2]	Data	Units[3,4]	Fill Value[5]

1 Units contains the value of the units attribute; valid_min and valid_max list the values of these attributes as min and max.

2 This is in C array order: the slowest-varying dimension is listed first and the fastest-varying dimension is listed last.

3 "count" is the Udunits unit defined as a "dimensionless decimal number". The UNIDATA Udunits package contains the set of units recognized by the NetCDF Climate and Forecast (CF) Metadata Conventions, V1.0.

4 "1" is the NetCDF Climate and Forecast (CF) Metadata Conventions, V1.0 conforming unit for quantities that represent fractions or parts of a whole.

5 The same fill value is specified by the *_FillValue and missing*_value attributes for each variable.

long_name attribute	cell_methods attribute	Type		valid_min valid_max
Resolution = 5 degree x 5 degree; number of latitude rows = 36, number of longitude columns = 72				
Swath_count Number of swaths that see a Level 3 Grid Cell	time, latitude, longitude latitude: sum longitude: sum time: sum	INT32	count	N/A 0 = min N/A = max
Expansive_albedo_average Average of expansive albedo. This is the average of the reflected flux divided by the average solar insolation, not a direct average of the Level 2 Albedos. This is the albedo that would be measured at a 30 km altitude, encompassing reflection from the entire scene viewable from that point. The Level 2 product that this variable summarizes provides the best estimate of top of atmosphere (TOA) energetics for the region. This is a summary of the MISR Level 2 Cloud Albedo 35.2 km x 35.2 km Regional fields, AlbedoExpansive and AlbedoExpansiveBroadband. AlbedoExpansive: Expansive albedo (four bands). AlbedoExpansiveBroadband: Broadband albedo calculated from a linear combination of all four spectral Expansive Albedo measurements.	Band, time, latitude, longitude latitude: mean longitude: mean time: mean (The contributing Level 2 pixels from each swath are first averaged; these swath averages are then averaged to form the mean.)	FLOAT32	1	-9999.0 = fill 0.0 = min 1.0 = max
Expansive_albedo_first_moment Average of expansive albedo. This is a direct average of the Level 2 Albedos. This is the albedo that would be measured at a 30 km altitude, encompassing reflection from the entire scene viewable from that point. The Level 2 product that this variable summarizes provides the best estimate of top of atmosphere (TOA) energetics for the region. This is a summary of the MISR Level 2 Cloud Albedo 35.2 km x 35.2 km Regional fields, AlbedoExpansive and AlbedoExpansiveBroadband. AlbedoExpansive: Expansive albedo (four bands). AlbedoExpansiveBroadband: Broadband albedo calculated from a linear combination of all four spectral Expansive Albedo measurements.	Band, time, latitude, longitude latitude: mean longitude: mean time: mean (The contributing Level 2 pixels from each swath are first averaged; these swath averages are then averaged to form the mean.)	FLOAT32	1	-9999.0 = fill 0.0 = min 1.0 = max
Expansive_albedo_standard_deviation Standard deviation of expansive albedo. This is the albedo that would be measured at a 30 km altitude, encompassing reflection from the entire scene viewable from that point. The Level 2 product that this variable summarizes provides the best estimate of top of atmosphere (TOA) energetics for the region. This is a summary of the MISR Level 2 Cloud Albedo 35.2 km x 35.2 km Regional fields, AlbedoExpansive and AlbedoExpansiveBroadband. AlbedoExpansive: Expansive albedo (four bands). AlbedoExpansiveBroadband: Broadband albedo calculated from a linear combination of all four spectral Expansive Albedo measurements.	Band, time, latitude, longitude atitude: longitude: time: standard_deviation (This is the standard deviation of the swath averages which are averaged to form the direct average of the Level 2 Albedos in variable *Expansive_albedo_ first _moment.)	FLOAT32	1	-9999.0 = fill 0.0 = min N/A = max

	(*"Expansive_albedo_first _moment_5_deg" was used)			
Expansive_albedo_solar_insolation Average solar insolation of pixels that contribute to Expansive albedo average. This is the albedo that would be measured at a 30 km altitude, encompassing reflection from the entire scene viewable from that point. The Level 2 product that this variable summarizes provides the best estimate of top of atmosphere (TOA) energetics for the region. This is a summary of the MISR Level 2 Cloud Albedo 35.2 km x 35.2 km Regional fields, AlbedoExpansive and AlbedoExpansiveBroadband. AlbedoExpansive: Expansive albedo (four bands). AlbedoExpansiveBroadband: Broadband albedo calculated from a linear combination of all four spectral Expansive Albedo measurements. [All but first sentence omitted.]	Band, time, latitude, longitude latitude: mean longitude: mean time: mean (The contributing Level 2 pixels from each swath are first averaged; these swath averages are then averaged to form the mean.)	FLOAT32	$\frac{W}{m^2 \mu m}$	-9999.0 = fill 0.0 = min N/A = max
Expansive_albedo_swath_count Count of the MISR Level 2 Cloud Albedo swaths which contain 35.2 km x 35.2 km Regions whose centers are within the Level 3 grid cell and which are used in the calculation of the corresponding element of the *Expansive_albedo_average variable. (*"Expansive_albedo_average_5_deg variable" was used)	Band, time, latitude, longitude latitude: sum longitude: sum time: sum	INT32	count	0 = fill 0 = min N/A = max
Local_albedo_average Average of local albedo. This is the average of the reflected flux divided by the average solar insolation, not a direct average of the Level 2 Albedos. This is a specialized product that provides the unobscured portion of reflected irradiance averaged at Level 2 over a 2.2 km subregion (normalized by incident top of atmosphere (TOA) irradiance). Because of obscuration by higher neighboring subregions, the local albedo may be highly variable for heterogeneous clouds, and attention must be given to the associated obscuration factors. This is a summary of the MISR Level 2 Cloud Albedo AlbedoLocal field. AlbedoLocal: 2.2 km x 2.2 km SubRegional Local TOA albedo (four bands).	Band, time, latitude, longitude latitude: mean longitude: mean time: mean (The contributing Level 2 pixels from each swath are first averaged; these swath averages are then averaged to form the mean.)	FLOAT32	1	-9999.0 = fill 0.0 = min 1.0 = max
Local_albedo_first_moment Average of local albedo. This is a direct average of the Level 2 Albedos. This is a specialized product that provides the unobscured portion of reflected irradiance averaged at Level 2 over a 2.2 km subregion (normalized by incident top of atmosphere (TOA) irradiance). Because of obscuration by higher neighboring subregions, the local albedo may be highly variable for heterogeneous clouds, and attention must be given to the associated	Band, time, latitude, longitude latitude: mean longitude: mean time: mean (The contributing Level 2 pixels from each swath are first averaged; these swath averages are	FLOAT32	1	-9999.0 = fill 0.0 = min 1.0 = max

obscuration factors. This is a summary of the MISR Level 2 Cloud Albedo AlbedoLocal field. AlbedoLocal: 2.2 km x 2.2 km SubRegional Local TOA albedo (four bands).	then averaged to form the mean.)			
Local_albedo_standard_deviation Standard deviation of local albedo. This is a specialized product that provides the unobscured portion of reflected irradiance averaged at Level 2 over a 2.2 km subregion (normalized by incident top of atmosphere (TOA) irradiance). Because of obscuration by higher neighboring subregions, the local albedo may be highly variable for heterogeneous clouds, and attention must be given to the associated obscuration factors. This is a summary of the MISR Level 2 Cloud Albedo AlbedoLocal field. AlbedoLocal: 2.2 km x 2.2 km SubRegional Local TOA albedo (four bands).	Band, time, latitude, longitude atitude: longitude: time: standard_deviation (This is the standard deviation of the swath averages which are averaged to form the direct average of the Level 2 Albedos in variable *Local_albedo_first _moment.) (*"Local_albedo_firs t _moment_5_deg" was used)	FLOAT32	1	-9999.0 = fill 0.0 = min N/A = max
Local_albedo_solar_insolation Average solar insolation of pixels that contribute to local albedo average. This is a specialized product that provides the unobscured portion of reflected irradiance averaged at Level 2 over a 2.2 km subregion (normalized by incident top of atmosphere (TOA) irradiance). Because of obscuration by higher neighboring subregions, the local albedo may be highly variable for heterogeneous clouds, and attention must be given to the associated obscuration factors. This is a summary of the MISR Level 2 Cloud Albedo AlbedoLocal field. AlbedoLocal: 2.2 km x 2.2 km SubRegional Local TOA albedo (four bands).	Band, time, latitude, longitude latitude: mean longitude: mean time: mean (The contributing Level 2 pixels from each swath are first averaged; these swath averages are then averaged to form the mean.)	FLOAT32	$\frac{W}{m^2 \mu m}$	-9999.0 = fill 0.0 = min N/A = max
Local_albedo_swath_count Count of the MISR Level 2 Cloud Albedo swaths which contain 2.2 km x 2.2 km SubRegions whose centers are within the Level 3 grid cell and which are used in the calculation of the corresponding element of the *Local_albedo_average variable. (*"Local_albedo_average_5_deg" was used)	Band, time, latitude, longitude latitude: sum longitude: sum time: sum	INT32	count	0 = fill 0 = min N/A = max
Restrictive_albedo_average Average of restrictive albedo. This is the average of the reflected flux divided by the average solar insolation, not a direct average of the Level 2 Albedos. This is an ERBE-like albedo. The Level 2 data is produced by averaging over 35.2 km x 35.2 km Regions at a level close to the reflecting surface, without regard to adjacent regions. This differs from the expansive albedo when the scenes are heterogeneous over large	Band, time, latitude, longitude latitude: mean longitude: mean time: mean (The contributing Level 2 pixels from each swath are first averaged; these	FLOAT32	1	-9999.0 = fill 0.0 = min 1.0 = max

areas. This is a summary of the MISR Level 2 Cloud Albedo 35.2 km x 35.2 km Regional fields, AlbedoRestrictive and AlbedoRestrictiveBroadband. AlbedoRestrictive: Restrictive albedo (four bands). AlbedoRestrictiveBroadband: Broadband albedo calculated from a linear combination of all four spectral Restrictive Albedo measurements.	swath averages are then averaged to form the mean.)			
Restrictive_albedo_first_moment Average of restrictive albedo. This is a direct average of the Level 2 Albedos. This is an ERBE-like albedo. The Level 2 data is produced by averaging over 35.2 km x 35.2 km Regions at a level close to the reflecting surface, without regard to adjacent regions. This differs from the expansive albedo when the scenes are heterogeneous over large areas. This is a summary of the MISR Level 2 Cloud Albedo 35.2 km x 35.2 km Regional fields, AlbedoRestrictive and AlbedoRestrictiveBroadband. AlbedoRestrictive: Restrictive albedo (four bands). AlbedoRestrictiveBroadband: Broadband albedo calculated from a linear combination of all four spectral Restrictive Albedo measurements.	Band, time, latitude, longitude latitude: mean longitude: mean time: mean (The contributing Level 2 pixels from each swath are first averaged; these swath averages are then averaged to form the mean.)	FLOAT32	1	-9999.0 = fill 0.0 = min 1.0 = max
Restrictive_albedo_standard_deviation Standard deviation of restrictive albedo. This is an ERBE-like albedo. The Level 2 data is produced by averaging over 35.2 km x 35.2 km Regions at a level close to the reflecting surface, without regard to adjacent regions. This differs from the expansive albedo when the scenes are heterogeneous over large areas. This is a summary of the MISR Level 2 Cloud Albedo 35.2 km x 35.2 km Regional fields, AlbedoRestrictive and AlbedoRestrictiveBroadband. AlbedoRestrictive: Restrictive albedo (four bands). AlbedoRestrictiveBroadband: Broadband albedo calculated from a linear combination of all four spectral Restrictive Albedo measurements.	Band, time, latitude, longitude atitude: longitude: time: standard_deviation (This is the standard deviation of the swath averages which are averaged to form the direct average of the Level 2 Albedos in variable *Restrictive_albedo_ first _moment.) (*"Restrictive_albedo_first _moment_5_deg" was used)	FLOAT32	1	-9999.0 = fill 0.0 = min N/A = max
Restrictive_albedo_solar_insolation Average solar insolation of pixels that contribute to restrictive albedo average. This is an ERBE-like albedo. The Level 2 data is produced by averaging over 35.2 km x 35.2 km Regions at a level close to the reflecting surface, without regard to adjacent regions. This differs from the expansive albedo when the scenes are heterogeneous over large areas. This is a summary of the MISR Level 2 Cloud Albedo 35.2 km x 35.2 km Regional fields, AlbedoRestrictive	Band, time, latitude, longitude latitude: mean longitude: mean time: mean (The contributing Level 2 pixels from each swath are first averaged; these swath averages are then averaged to	FLOAT32	$\frac{W}{m^2 \mu m}$	-9999.0 = fill 0.0 = min N/A = max

and AlbedoRestrictiveBroadband. AlbedoRestrictive: Restrictive albedo (four bands). AlbedoRestrictiveBroadband: Broadband albedo calculated from a linear combination of all four spectral Restrictive Albedo measurements.	form the mean.)			
Restrictive_albedo_swath_count Count of the MISR Level 2 Cloud Albedo swaths which contain 35.2 km x 35.2 km Regions whose centers are within the Level 3 grid cell and which are used in the calculation of the corresponding element of the *Restrictive_albedo_average variable. (*"Restrictive_albedo_average_5_deg" was used)	Band, time, latitude, longitude latitude: sum longitude: sum time: sum	INT32	count	0 = fill 0 = min N/A = max
Minute_of_day_of_observation Minute of day at which time any part of a Level 2 swath intersects the location and period of a Level 3 grid cell. The time of this observation is the average of the Level 2 block center time of the first and last Level 2 blocks which intersect the Level 3 grid cell.	observation, timeobs, time, latitude, longitude latitude: point longitude: point timeobs: point	INT16	minute	-9999 = fill 0 = min 1439 = max
Orbit_number_of_observation Orbit number of a Level 2 swath which intersects the location and period of a Level 3 grid cell.	observation, timeobs, time, latitude, longitude latitude: point longitude: point timeobs: point	INT32	count	-9999 = fill 1 = min 999999 = *max (*omitted)

11.2.8.5 CGAL_1_DEG Global Attributes

Table 11-19: CGAL_1_DEG Global Attributes

Attribute Name	Attribute Value or <Description>
Conventions	CF-1.0
title	MISR Level 3 <Daily, Monthly, Seasonal, Yearly> Component Global Albedo Product (1 degree) for <period>, AlbedoAverage_1_degree grid fields. Version Fff_vvvv
history	<production date and time>, produced by MISR Level 3 PGE software <LOCALVERSIONID attribute value (see below)>
institution	NASA Langley Atmospheric Sciences Data Center (ASDC)
source	Multi-angle Imaging SpectroRadiometer (MISR) on Terra, NASA's first Earth Observing System (EOS) spacecraft
references	MISR Data Sets: http://eosweb.larc.nasa.gov/PRODOCS/misr/table_misr.html MISR Data Products Specifications: http://eosweb.larc.nasa.gov/PRODOCS/misr/DPS/ MISR Level 3 Versioning: http://eosweb.larc.nasa.gov/PRODOCS/misr/Version/pge12b.html MISR Algorithm Theoretical Basis Documents (ATB): http://eospso.gsfc.nasa.gov/eos_homepage/for_scientists/atbd/viewInstrument.php?instrument=9 [*For MISR Level 2 Surface Retrieval ATB references in variable long_name attributes:

	http://eospso.gsfc.nasa.gov/eos_homepage/for_scientists/atbd/docs/MISR/atbd-misr-10.pdf] (*included, though this does not apply to CGAL products)
comment	The MISR Level 3 Component Global Albedo (CGAL) *AlbedoAverage_1_degree grid fields summarize selected MISR Level 2 ^Cloud Albedo^ parameters. The Level 3 global summaries are reported on a rectangular, geographic grid that is 1 degree latitude by 1 degree longitude. The lower left corner of the grid is located at -90 S, -180 W. The center of the lower left corner grid cell is at -89.5 S, -179.5 W. (*"AlbedoParameterAverage" was used) (^"Surface" was used) (This was also generalized with the addition of the following two parenthesized phrases following their 1-degree analogs: (or 5 degree by 5 degree) (or -87.5 S, -177.5 W))
LOCALGRANULEID	See Table 11-2
LOCALVERSIONID	MISR_EXEC_VERSION: V4.1_i1_PGE12BP MISR_EXEC_NAME:pge12bp.cc
PGEVERSION	4.1
EASTBOUNDINGCOORDINATE	180.
WESTBOUNDINGCOORDINATE	-180.
SOUTHBOUNDINGCOORDINATE	-90.
NORTHBOUNDINGCOORDINATE	90.
RANGEENDINGDATE	<yyyy-mm-dd>
RANGEENDINGTIME	<hh:mm:ss.ssssss>
RANGEBEGINNINGDATE	<yyyy-mm-dd>
RANGEBEGINNINGTIME	<hh:mm:ss.ssssss>

11.2.8.6 CGAL_5_DEG Global Attributes

Table 11-20: CGAL_5_DEG Global Attributes

Attribute Name	Attribute Value or <Description>
Conventions	CF-1.0
title	MISR Level 3 <Daily, Monthly, Seasonal, Yearly> Component Global Albedo Product (5 degree) for <period>, AlbedoAverage_5_degree grid fields. Version Fff_vvvv
history	<production date and time>, produced by MISR Level 3 PGE software <LOCALVERSIONID attribute value (see below)>
institution	NASA Langley Atmospheric Sciences Data Center (ASDC)
source	Multi-angle Imaging SpectroRadiometer (MISR) on Terra, NASA's first Earth Observing System (EOS) spacecraft
references	MISR Data Sets: http://eosweb.larc.nasa.gov/PRODOCS/misr/table_misr.html MISR Data Products Specifications: http://eosweb.larc.nasa.gov/PRODOCS/misr/DPS/ MISR Level 3 Versioning: http://eosweb.larc.nasa.gov/PRODOCS/misr/Version/pge12b.html MISR Algorithm Theoretical Basis Documents (ATB): http://eospso.gsfc.nasa.gov/eos_homepage/for_scientists/atbd/viewInstrument.php?instrument=9

	[*For MISR Level 2 Surface Retrieval ATB references in variable long_name attributes: http://eospso.gsfc.nasa.gov/eos_homepage/for_scientists/atbd/docs/MISR/atbd-misr-10.pdf] (*included, though this does not apply to CGAL products)
comment	The MISR Level 3 Component Global Albedo (CGAL) *AlbedoAverage_5_degree grid fields summarize selected MISR Level 2 ^Cloud Albedo^ parameters. The Level 3 global summaries are reported on a rectangular, geographic grid that is 5 degree latitude by 5 degree longitude. The lower left corner of the grid is located at -90 S, -180 W. The center of the lower left corner grid cell is at -87.5 S, -177.5 W. (*"AlbedoParameterAverage" was used) (^"Surface" was used) (This was also generalized, as described in the previous table, for the CGAL_1_DEG "comment" global attribute, such that the "comment" attribute value is identical for both resolutions of the CGAL product.)
LOCALGRANULEID	See Table 11-2
LOCALVERSIONID	MISR_EXEC_VERSION: V4.1_i1_PGE12BP MISR_EXEC_NAME:pge12bp.cc
PGEVERSION	4.1
EASTBOUNDINGCOORDINATE	180.
WESTBOUNDINGCOORDINATE	-180.
SOUTHBOUNDINGCOORDINATE	-90.
NORTHBOUNDINGCOORDINATE	90.
RANGEENDINGDATE	<yyyy-mm-dd>
RANGEENDINGTIME	<hh:mm:ss.ssssss>
RANGEBEGINNINGDATE	<yyyy-mm-dd>
RANGEBEGINNINGTIME	<hh:mm:ss.ssssss>

11.2.9 MISR LEVEL 3 MI3DCLDN, MI3MCLDN, MI3QCLDN, MI3YCLDN COMPONENT GLOBAL CLOUD netCDF PRODUCT

11.2.9.1 CGCL Metadata Variables

Table 11-22: CGCL metadata variables[1]

Variable	Dimension	long_name attribute or	Data	Units[5],[6]	Valid

1 Units contains the value of the units attribute.
2 Each of the variables, period, time, latitude, longitude, and time, has the "bounds" attribute, whose value is the name of the associated bounds variable, respectively, period_bounds, latitude_bounds, longitude_bounds, and time_bounds.
3 The latitude and longitude variables each have the standard_name attribute, whose value is the name of the variable.
4 This is in C array order: the slowest-varying dimension is listed first and the fastest-varying dimension is listed last.
5 "count" is the Udunits unit defined as a "dimensionless decimal number". The UNIDATA Udunits package contains the set of units recognized by the NetCDF Climate and Forecast (CF) Metadata Conventions, V1.0.
6 Each of the variables, period, time, period_bounds, and time_bounds, has the "calendar" attribute with value "standard".
7 Though each variable has an associated fill value, it is not described in this document for these variables.

Name[2,3] (axis attribute)	List[4]	description	Type		Range[7]
Orbit_Number	Orbit_Number	Orbit numbers of MISR Level 2 files which are summarized in this Level 3 file.	INT32	count	1 to 999999 (valid_min only; valid_max omitted)
Path_Number	Orbit_Number	Orbital path numbers of MISR Level 2 files which are summarized in this Level 3 file.	INT16	count	1 to 233 (valid_min and valid_max)
Local_Granule_Id	Orbit_Number ,LocalGranuleString (= 80)	Local Granule Id (file name) of MISR Level 2 files which are summarized in this Level 3 file.	CHAR8	N/A	N/A
Local_Version_Id	Orbit_Number ,LocalVersionString (= 100)	Local Version Id (MISR_EXEC_VERSION (software version label) and MISR_EXEC_NAME (executable name)) used to produce each of the MISR Level 2 files which are summarized in this Level 3 file.	CHAR8	N/A	N/A
time (axis = T)	time	Midpoint of the period summarized by this file.	FLOAT32	days since 2000-01-01 00:00:00	Varies with period of file.
latitude (axis = Y)	latitude	Midpoint of the latitude range summarized by each row of grid cells.	FLOAT32	degrees_north	Nominally -90.0 to 90.0
longitude (axis = X)	longitude	Midpoint of the longitude range summarized by each column of grid cells.	FLOAT32	degrees_east	Nominally -180.0 to 180.0
observation	observation	Observation within a grid cell for a day. (“Observations with a grid cell for a day.” was used)	INT8	count (“counts” was used)	>= 1
timeobs (axis = T)	timeobs	Midpoint of the day represented by each plane of grid cells of the Minute_of_day_of_observation and Orbit_number_of_observation variables.	FLOAT32	days since 2000-01-01 00:00:00	Varies with period of file.
time_bounds	time, Number_of_cell_vertices	Beginning and end of the period summarized by this file.	FLOAT32	days since 2000-01-01 00:00:00	Varies with period of file.
latitude_bounds	latitude, Number_of_cell_vertices	Upper and lower bound of *the latitude range summarized by each row of grid cells. (*”each” was used)	FLOAT32	degrees_north	Nominally -90.0 to 90.0
longitude_bounds	longitude, Number_of_cell_vertices	Upper and lower bound of *the longitude range summarized by each column of grid cells. (*”each” was used)	FLOAT32	degrees_east	Nominally -180.0 to 180.0
timeobs_bounds	timeobs, Number_of_cell_vertices	Beginning and end of the day represented by each plane of grid cells of the Minute_of_day_of_observation and Orbit_number_of_observation variables.	FLOAT32	days since 2000-01-01 00:00:00	Varies with period of file.

<Dimension name>[1]	<Dimension name>[1]	One-based index number.	INT32	NA	>= 1
<Dimension name>[1]_label	<Dimension name>[1], DimensionString (= 60)	Meaning of each value in the dimension. For example, Band has 4 entries: "Blue_(443_nm)", "Green_(555_nm)", "Red_(670_nm)", "Infrared_(865_nm)".	CHAR8	N/A	N/A

11.2.9.2 CGCL Labeled Dimension Variables

Table 11-23: CGCL Labeled Dimension Variables

Coordinate Variable and Associated Label Variable[2]	long_name attribute of coordinate variable	Number of values	Values of Coordinate Variable (a) and Associated Label Variable (b): a = b
HeightBin, HeightBin_labels	Height bin.	15	0 = <_0.5_km 1 = 0.5_-_1_km 2 = 1_-_1.5_km 3 = 1.5_-_2_km 4 = 2_-_2.5_km 5 = 2.5_-_3_km 6 = 3_-_5_km 7 = 5_-_7_km 8 = 7_-_9_km 9 = 9_-_11_km 10 = 11_-_13_km 11 = 13_-_15_km 12 = 15_-_17_km 13 = 17_-_19_km 14 = >_19_km
WindIndex, WindIndex_labels	Wind index.	3	0 = North/South_Speed 1 = East/West_Speed 2 = Total_Speed
WindType, WindType_labels	Type of algorithm used for wind (with or without height correction).	2	0 = Without_wind_correction 1 = With_wind_correction

11.2.9.3 CGCL_0_5_DEG Geographic Grid Variables

Table 11-24: CGCL_0_5_DEG Geographic Grid Variables[3]

Variable Name	Dimension	Data	Units[5]	Fill Value[1]

1 <Dimension name> is a placeholder for each labeled dimension in file. For example, there is a variable named "HeightBin" with associated label variable "HeightBin_labels". See 11.2.9.2 for list of labeled dimensions.

2 The coordinate variable has the "coordinates" and "coord_labels" attributes, whose value is the name of the associated label variable.

3 Units contains the value of the units attribute; valid_min and valid_max list the values of these attributes as min and max.

4 This is in C array order: the slowest-varying dimension is listed first and the fastest-varying dimension is listed last.

5 "count" is the Udunits unit defined as a "dimensionless decimal number". The UNIDATA Udunits package contains

long_name attribute	List[4] cell_methods attribute	Type		valid_min valid_max
Resolution = 0.5 degree x 0.5 degree; number of latitude rows = 360, number of longitude columns = 720				
Stereo_height_bin_average Average of the stereo height for the pixels falling in a particular bin of the Stereo_height_histogram variable. This is a summary of the MISR Level 2 Cloud Stereo 1.1 km x 1.1 km SubRegional fields, StereoHeight_BestWinds and StereoHeight_WithoutWinds. StereoHeight_BestWinds: Stereoscopic height determined using the Best Quality Winds only, containing fill when a suitable wind was not available. (Feature-referenced) StereoHeight_WithoutWinds: Stereoscopic height calculated without a wind correction. (Feature-referenced)	HeightBin, WindType, time, latitude, longitude latitude: mean longitude: mean time: mean	FLOAT32	meters	-9999.0 = fill N/A = min N/A = max
Stereo_height_histogram Histogram of MISR Level 2 pixels found at a particular height. This is a count of the MISR Level 2 Cloud Stereo 1.1 km x 1.1 km SubRegions whose centers are within the Level 3 grid cell and whose height, as reported by the StereoHeight_BestWinds and StereoHeight_WithoutWinds SubRegional fields of that product, is contained within the height range of that bin. StereoHeight_BestWinds: Stereoscopic height determined using the Best Quality Winds only, containing fill when a suitable wind was not available. (Feature-referenced) StereoHeight_WithoutWinds: Stereoscopic height calculated without a wind correction. (Feature-referenced)	HeightBin, WindType, time, latitude, longitude latitude: sum longitude: sum time: sum	INT32	count	0 = fill 0 = min N/A = max
Minute_of_day_of_observation Minute of day at which time any part of a Level 2 swath intersects the location and period of a Level 3 grid cell. The time of this observation is the average of the Level 2 block center time of the first and last Level 2 blocks which intersect the Level 3 grid cell.	observation, timeobs, time, latitude, longitude latitude: point longitude: point timeobs: point	INT16	minute	-9999 = fill 0 = min 1439 = max
Orbit_number_of_observation Orbit number of a Level 2 swath which intersects the location and period of a Level 3 grid cell.	observation, timeobs, time, latitude, longitude latitude: point longitude: point timeobs: point	INT32	count	-9999 = fill 1 = min 999999 = *max (*omitted)

11.2.9.4 CGCL_2_5_DEG Geographic Grid Variables

Table 11-25: CGCL_2_5_DEG Geographic Grid Variables[2]

the set of units recognized by the NetCDF Climate and Forecast (CF) Metadata Conventions, V1.0.

1 The same fill value is specified by the *_FillValue and missing*_value attributes for each variable.

2 Units contains the value of the units attribute; valid_min and valid_max list the values of these attributes as min and max.

Variable Name long_name attribute	Dimension List[1] cell_methods attribute	Data Type	Units[2]	Fill Value[3] valid_min valid_max
Resolution = 2.5 degree x 2.5 degree; number of latitude rows = 72, number of longitude columns = 144				
Wind_speed_average Average wind speed. This is given as a vector of North/South, East/West, and Total. The convention is that a postive value for North/South means that the wind vector points North. Similarly, a positive value for East/West means that the wind vector points East. This is a summary of the MISR Level 2 Cloud Stereo 70.4 km x 70.4 km Domain fields, NSCloudMotionSpeedLowCloudBin, EWCloudMotionSpeedLowCloudBin, NSCloudMotionSpeedHighCloudBin, and EWCloudMotionSpeedHighCloudBin, which are respectively defined as: North-South motion vector speed from low-cloud bin, East-West motion vector speed from low-cloud bin, North-South motion vector speed from high-cloud bin, and East-West motion vector speed from high-cloud bin.	HeightBin, WindIndex, time, latitude, longitude latitude: mean longitude: mean time: mean	FLOAT32	meters/ second	-9999.0 = fill N/A = min N/A = max
Wind_speed_standard_deviation Standard devation of wind speed. This is given as a vector of North/ South, East/West, and Total. This is a summary of the MISR Level 2 Cloud Stereo 70.4 km x 70.4 km Domain fields, NSCloudMotionSpeedLowCloudBin, EWCloudMotionSpeedLowCloudBin, NSCloudMotionSpeedHighCloudBin, and EWCloudMotionSpeedHighCloudBin, which are respectively defined as: North-South motion vector speed from low-cloud bin, East-West motion vector speed from low-cloud bin, North-South motion vector speed from high-cloud bin, and East-West motion vector speed from high-cloud bin.	HeightBin, WindIndex, time, latitude, longitude latitude: longitude: time: standard_deviation	FLOAT32	meters/ second	0 = fill 0.0 = min N/A = max
Wind_speed_swath_count Count of the MISR Level 2 Cloud Stereo swaths containing 70.4 km x 70.4 km Domains whose centers are within the Level 3 grid cell and which are used in the calculation of the corresponding elements of the Wind_speed_average and Wind_speed_standard_deviation variables. This is given as a vector of North/South, East/West, and Total. This is a summary of the MISR Level 2 Cloud Stereo 70.4 km x 70.4 km Domain fields, NSCloudMotionSpeedLowCloudBin, EWCloudMotionSpeedLowCloudBin,	HeightBin, WindIndex, time, latitude, longitude latitude: sum longitude: sum time: sum	INT32	count	0 = fill 0 = min N/A = max

1 This is in C array order: the slowest-varying dimension is listed first and the fastest-varying dimension is listed last.
2 "count" is the Udunits unit defined as a "dimensionless decimal number". The UNIDATA Udunits package contains the set of units recognized by the NetCDF Climate and Forecast (CF) Metadata Conventions, V1.0.
3 The same fill value is specified by the *_FillValue and missing*_value attributes for each variable.

NSCloudMotionSpeedHighCloudBin, and EWCloudMotionSpeedHighCloudBin, which are respectively defined as: North-South motion vector speed from low-cloud bin, East-West motion vector speed from low-cloud bin, North-South motion vector speed from high-cloud bin, and East-West motion vector speed from high-cloud bin.				
Minute_of_day_of_observation Minute of day at which time any part of a Level 2 swath intersects the location and period of a Level 3 grid cell. The time of this observation is the average of the Level 2 block center time of the first and last Level 2 blocks which intersect the Level 3 grid cell.	observation, timeobs, time, latitude, longitude latitude: point longitude: point timeobs: point	INT16	minute	-9999 = fill 0 = min 1439 = max
Orbit_number_of_observation Orbit number of a Level 2 swath which intersects the location and period of a Level 3 grid cell.	observation, timeobs, time, latitude, longitude latitude: point longitude: point timeobs: point	INT32	count	-9999 = fill 1 = min 999999 = *max (*omitted)

11.2.9.5 CGCL_0_5_DEG Global Attributes

Table 11-26: CGCL_0_5_DEG Global Attributes

Attribute Name	Attribute Value or <Description>
Conventions	CF-1.0
title	MISR Level 3 <Daily, Monthly, Seasonal, Yearly> Component Global Cloud Product for <period>, CloudAverage grid fields. Version Fff_vvvv
history	<production date and time>, produced by MISR Level 3 PGE software <LOCALVERSIONID attribute value (see below)>
institution	NASA Langley Atmospheric Sciences Data Center (ASDC)
source	Multi-angle Imaging SpectroRadiometer (MISR) on Terra, NASA's first Earth Observing System (EOS) spacecraft
references	MISR Data Sets: http://eosweb.larc.nasa.gov/PRODOCS/misr/table_misr.html MISR Data Products Specifications: http://eosweb.larc.nasa.gov/PRODOCS/misr/DPS/ MISR Level 3 Versioning: http://eosweb.larc.nasa.gov/PRODOCS/misr/Version/pge12b.html MISR Algorithm Theoretical Basis Documents (ATB): http://eospso.gsfc.nasa.gov/eos_homepage/for_scientists/atbd/viewInstrument.php?instrument=9 [*For MISR Level 2 Surface Retrieval ATB references in variable long_name attributes: http://eospso.gsfc.nasa.gov/eos_homepage/for_scientists/atbd/docs/MISR/atbd-misr-10.pdf] (*included, though this does not apply to CGCL products)
comment	The MISR Level 3 Component Global Cloud (CGCL) CloudAverage grid fields summarize selected MISR *Level 2 Cloud Stereo parameters. The Level 3 global summaries are reported on a rectangular, geographic grid that is 0.5 degree latitude by 0.5 degree longitude. The lower left corner of the grid is

	located at -90 S, -180 W. The center of the lower left corner grid cell is at -89.75 S, -179.75 W. (*"Level 2 Cloud Classifiers and" was inserted here.)
LOCALGRANULEID	See Table 11-2
LOCALVERSIONID	MISR_EXEC_VERSION: V4.1_i1_PGE12BP MISR_EXEC_NAME:pge12bp.cc
PGEVERSION	4.1
EASTBOUNDINGCOORDINATE	180.
WESTBOUNDINGCOORDINATE	-180.
SOUTHBOUNDINGCOORDINATE	-90.
NORTHBOUNDINGCOORDINATE	90.
RANGEENDINGDATE	<yyyy-mm-dd>
RANGEENDINGTIME	<hh:mm:ss.ssssss>
RANGEBEGINNINGDATE	<yyyy-mm-dd>
RANGEBEGINNINGTIME	<hh:mm:ss.ssssss>

11.2.9.6 CGCL_2_5_DEG Global Attributes

Table 11-27: CGCL_2_5_DEG Global Attributes

Attribute Name	Attribute Value or <Description>
Conventions	CF-1.0
title	MISR Level 3 <Daily, Monthly, Seasonal, Yearly> Component Global Cloud Product for <period>, CloudWindAverage grid fields. Version Fff_vvvv
history	<production date and time>, produced by MISR Level 3 PGE software <LOCALVERSIONID attribute value (see below)>
institution	NASA Langley Atmospheric Sciences Data Center (ASDC)
source	Multi-angle Imaging SpectroRadiometer (MISR) on Terra, NASA's first Earth Observing System (EOS) spacecraft
references	MISR Data Sets: http://eosweb.larc.nasa.gov/PRODOCS/misr/table_misr.html MISR Data Products Specifications: http://eosweb.larc.nasa.gov/PRODOCS/misr/DPS/ MISR Level 3 Versioning: http://eosweb.larc.nasa.gov/PRODOCS/misr/Version/pge12b.html MISR Algorithm Theoretical Basis Documents (ATB): http://eospso.gsfc.nasa.gov/eos_homepage/for_scientists/atbd/viewInstrument.php?instrument=9 [*For MISR Level 2 Surface Retrieval ATB references in variable long_name attributes: http://eospso.gsfc.nasa.gov/eos_homepage/for_scientists/atbd/docs/MISR/atbd-misr-10.pdf] (*included, though this does not apply to CGCL products)
comment	The MISR Level 3 Component Global Cloud (CGCL) ^CloudWindAverage grid fields summarize selected MISR *Level 2 Cloud Stereo parameters. The Level 3 global summaries are reported on a rectangular, geographic grid that is 2.5 degree latitude by 2.5 degree longitude. The lower left corner of the grid is located at -90 S, -180 W. The center of the lower left corner grid cell is at -88.75 S, -178.75 W. (*"Level 2 Cloud Classifiers and" was inserted here)

	(^"CloudAverage" was used)
LOCALGRANULEID	See Table 11-2
LOCALVERSIONID	MISR_EXEC_VERSION: V4.1_i1_PGE12BP MISR_EXEC_NAME:pge12bp.cc
PGEVERSION	4.1
EASTBOUNDINGCOORDINATE	180.
WESTBOUNDINGCOORDINATE	-180.
SOUTHBOUNDINGCOORDINATE	-90.
NORTHBOUNDINGCOORDINATE	90.
RANGEENDINGDATE	<yyyy-mm-dd>
RANGEENDINGTIME	<hh:mm:ss.ssssss>
RANGEBEGINNINGDATE	<yyyy-mm-dd>
RANGEBEGINNINGTIME	<hh:mm:ss.ssssss>

11.3 MISR LEVEL 3 NETCDF CMV PRODUCT

11.3.1 MISR LEVEL 3 NETCDF CMV PRODUCT GRANULE NAMES

MISR Level 3 netCDF CMV Products are reported at three time scales: monthly, seasonal, and yearly. The files have an identical format on each of the time scales. The file granules are listed below. The files are also redundant. There is no less or more information present within one yearly file relative to twelve associated monthly files.

Table 11-28: MISR Level 3 NetCDF CMV Product Granule Names

MISR LEVEL 3 NETCDF CMV FILE GRANULE NAME[1]	ESDT Name
MISR_AM1_CMV_mmm_yyyy_Fff_vvvv.nc	MI3MCMVN
MISR_AM1_CMV_sss_yyyy_Fff_vvvv.nc	MI3QCMVN
MISR_AM1_CMV_yyyy_Fff_vvvv.nc	MI3YCMVN

11.3.1 MISR LEVEL 3 NETCDF CMV PRODUCT GRANULE BRIEF DESCRIPTIONS

Level 3 provides a list of cloud motion vector retrievals collected from the L2TC product. Retrievals deemed to be of low quality are omitted from this list, but the information within the L2TC product is otherwise reproduced without alteration.

The format of this data is a set of netCDF fields associated with every retrieval. Each field shares the time dimension. Retrievals- and associated netCDF fields- are chronologically ordered.

11.3.2 MISR LEVEL 3 NETCDF CMV PRODUCT GLOBAL ATTRIBUTES

Table 11-29: MISR Level 3 NetCDF CMV Product Global Attributes

Attribute Name	Attribute Value or <Description>
Conventions	CF-1.4

1 “mmm” is the three-character month (one of “DEC”, “JAN”, “FEB”, “MAR”, “APR”, “MAY”, “JUN”, “JUL”, “AUG”, “SEP”, “OCT”, “NOV”), “sss” is the season (one of “WIN”, “SPR”, “SUM”, “FALL”, corresponding to groups of three months starting with December), “yyyy” is the four-digit year (e.g., “2002”), “ff” is the format version number (e.g. “01”), and “vvvv” is the data version number (e.g., “0001”).

CF:featureType	point
title	MISR Level 3 Cloud Motion Vector <monthly, seasonal, annual> Product for <period>; Version Fff_vvvv
history	<production date and time>, produced by MISR Level 3 Cloud Motion Vector <monthly, seasonal, annual> Product from TC_STEREO
institution	NASA Langley Atmospheric Sciences Data Center (ASDC)
source	Multi-angle Imaging SpectroRadiometer (MISR) on Terra, NASA's first Earth Observing System (EOS) spacecraft
references	MISR Data Sets: http://eosweb.larc.nasa.gov/PRODOCS/misr/table_misr.html MISR Data Products Specifications: http://eosweb.larc.nasa.gov/PRODOCS/misr/DPS/MISR Algorithm Theoretical Basis Documents (ATB): http://eospso.gsfc.nasa.gov/eos_homepage/for_scientists/atbd/viewInstrument.php?instrument=9 For MISR Level 2 Cloud Detection and Classification ATB references: http://eospso.gsfc.nasa.gov/eos_homepage/for_scientists/atbd/docs/MISR/atbd-misr-07.pdf
comment	The MISR Level 3 Cloud Motion Vector <monthly, seasonal, annual> Product contains a list of best quality cloud motion retrievals collected from the MISR Level 2 Cloud Detection and Classification product.
StereoVersion	0017
ProductionHost	Computer on which product was produced
ProductionDateTime	Date and time which product was produced
LocalGranuleID	See Table 11-2
PGEVersion	1.0
RangeEndingDate	<yyyy-mm-dd>
RangeEndingTime	<hh:mm:ss.ssssss>
RangeBeginningDate	<yyyy-mm-dd>
RangeBeginningTime	<hh:mm:ss.ssssss>

11.3.3 MISR Level 3 netCDF CMV Product Variables

The parameters associated with each retrieved cloud motion vector are specified as product variables, all of which share the same netCDF dimension, "Time". Retrievals are specified in chronological order. All parameters are specified for all retrievals so there are no fill values present within product files.

Table 11-30: MISR Level 3 NetCDF CMV Product Variables

Variable Name Description	Data Type	Units[1]	Values[2] valid_min valid_max
Time	FLOAT64	seconds since 1970-01-01 00:00:00	N/A = min N/A = max
Latitude Latitude of center of 70.4 km grid cell	FLOAT32	Degrees north	-90 = min 90 = max
Longitude Longitude of center of 70.4 km grid cell	FLOAT32	Degrees east	-180 = min 180 = max
Orbit Orbit of Terra Instrument	INT	N/A	N/A = min N/A = max
Year Year (redundant with Time variable)	SHORT	years	N/A = min N/A = max
DayOfYear Julian day (redundant with Time variable)	SHORT	days	1 = min 366 = max
HourOfDay Fractional hour of julian day (redundant with Time variable)	FLOAT32	hours	0 = min 24 = max
CloudMotionEast Eastward cloud motion	FLOAT32	m/s	N/A = min N/A = max
CloudMotionNorth Northward cloud motion	FLOAT32	m/s	N/A = min N/A = max
CloudTopAltitude	FLOAT32	m	N/A = min N/A = max
FwdAftDifferenceCloudMotionEast Forward camera minus aft camera eastward cloud motion	FLOAT32	m/s	N/A = min N/A = max
FwdAftDifferenceCloudMotionNorth Forward camera minus aft camera northward cloud motion	FLOAT32	m/s	N/A = min N/A = max
FwdAftDifferenceCloudTopAltitude Forward camera minus aft camera cloud top altitude	FLOAT32	m	N/A = min N/A = max
InstrumentHeading Heading of Terra specified in degrees clockwise from North	FLOAT32	degrees	0 = min 360= max
QualityIndicator	BYTE	N/A	0 = min 100 = max
LegacyQualityFlag Deprecated quality flag from L2TC product	BYTE	N/A	0 = No Retrieval, 1 = Poor, 2= Unknown, 3= Good,

1 “count” is the Udunits unit defined as a “dimensionless decimal number”. The UNIDATA Udunits package contains the set of units recognized by the NetCDF Climate and Forecast (CF) Metadata Conventions, V1.0.

2 Special meanings attached to specific values, and or valid minimum and maximum values of variable.

			4 = VeryGood.
LandNearby Whether or not terrain was present within or adjacent to 70.4 km retrieval domain	BYTE	N/A	0 = no land nearby, 1 = land nearby

APPENDIX A: MISR GEOREGISTRATION INFO

A.1 Introduction

The concept of multi-angle imaging, which is being pioneered by the MISR experiment, is distinct in several ways from traditional nadir-viewing, scene-based multi-spectral imaging. All remote sensing data products are contaminated by BRF effects in the cross-track direction. This fact is ignored by most in the remote sensing community. MISR is the only instrument to date that makes a genuine effort to deal with and benefit from BRF effects. It soes so by acquiring imagery from multiple angles in the along-track direction in a short enough period of time to characterize the anisotropy of the surface-atmposhpere system. The design of MISR data products was shaped largely by the stringent requirements of the experiment. Users of MISR data have requested clarification about product attributes such as the Space Oblique Mercator (SOM) map projection, the stacked-block HDF-EOS Grid format, and the large size and geographical extent of MISR files. This document provides background information on such topics. It also describes the most precise method for extracting georegistration information directly from MISR files.

There are two ways to determine the latitude and longitude of a pixel within a MISR file. The first method involves reading values directly from an ancillary file called the Ancillary Geographic Product (AGP). Because of data volume considerations, it was not practical to include this redundant information within MISR product files. AGP values are reported at a single resolution. There fore, interpolation may be required to determine Lat/Lon for a particular desired resolution. The AGP is described in detail in section [9.4] of the parent document[1]. There is one AGP for each Terra orbital path. The MISR AGP is available for public distribution at the Langley DAAC.

The second method for determining lat/lon is much more flexible and requires no ancillary files. The crux of this operation involves coordinate conversions between MISR (block,line,sample), SOM(X,Y), and Lat/Lon. These conversions are supported by orbital parameters and projection information embedded within all MISR products. Such conversions are readily accomplished using HDF-EOS library access routines and the accompanying GCTP map projections library[3]. More complex operations, such as resampling an entire scene to another map projection, are not difficult once the fundamental conversions described herein are understood.

Individuals who are familiar with the MISR experiment, MISR data products, HDF-EOS, the SOM map projection and the GCTP software library may wish to proceed directly to the sections describing coordinate conversion [A.5]. However, most users will save time by perusing the Background sections first. Information about key Metadata values required for coordinate conversions has been condensed for quick-reference into the Metadata Details section[§A.6]. Example C function calls can be found at the end of this document to clarify the function call interfaces that are used in the algorithm described in [A.5]

A.2 Background: The Instrument

The Multi-angle Imaging SpectroRadiometer (MISR) is a new and unique type of satellite instrument. As the Terra satellite moves in its descending polar orbit, each of 9 MISR cameras images the

same daylit ground swath, which is 1504 detector samples wide by roughly 70,000 lines long. MISR obtains images for any pixel in the swath from 9 different angles in four different wavelengths. Many remote sensing experiments make use of spectral information to measure physical properties of the Earth's surface, vegetation, atmosphere and clouds. The novel goal of the MISR design is to make use of angular information as well as spectral. The challenge is that this ambitious scientific task cannot be accomplished unless the 36 pixels MISR obtained for each location can be registered together accurately, 9 cameras x 4 bands = 36. An additional complication in the instrument configuration is that not all 4 bands are acquired at the same resolution in all cameras. In fact, in Global Science mode, the MISR nadir camera is the only one with all four bands at high resolution (275 meters). The other 8 cameras produce red band data at 275 m resolution, but the remaining channels are averaged to 1.1km resolution. MISR also has a Local Science Mode in which all 36 channels are temporarily acquired at 275 m resolution over a selected scene.

Figure A-1 Artist's Rendition of MISR aboard Terra and sample MISR images.

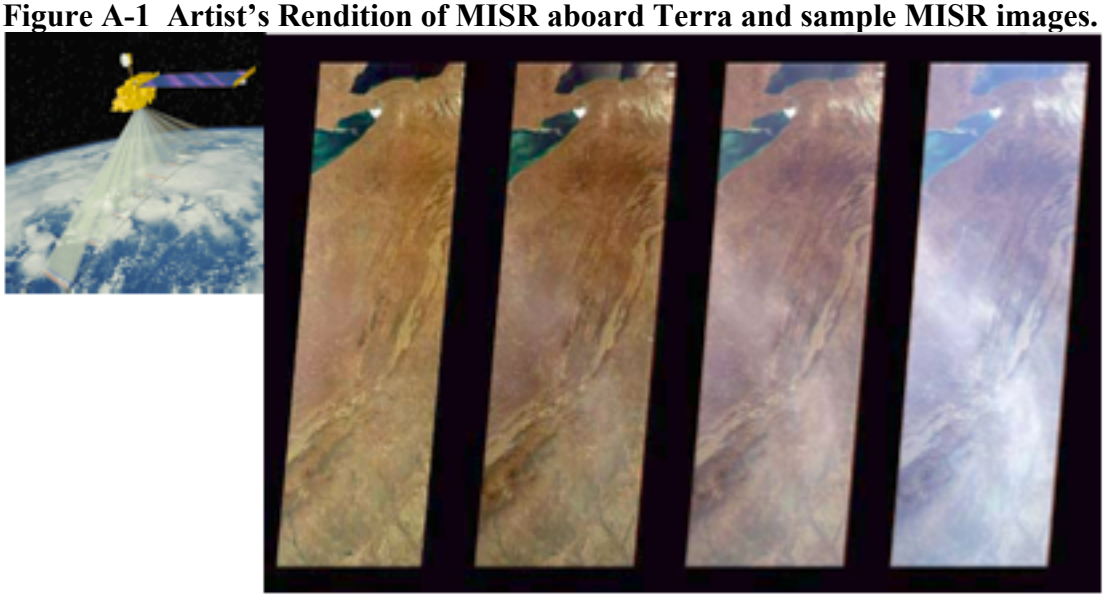

The leftmost panel of Figure [A-1] shows an artist's rendition of the MISR instrument on-board the Terra platform, acquiring data from its nine cameras simultaneously for nine different locations in the four spectral bands. The four panels on the right exhibit the true-color (red, green, blue) images acquired by the nadir and forward 45.6-degree, 60.0-degree, and 70.5-degree cameras, respectively. The sensitivity of the slanted cameras to aerosols (in particular haze) is clearly demonstrated in this sequence.

The diagrams on the next page illustrate the concept that each MISR camera eventually views one ground point at a slightly different time from a different angle as the spacecraft passes over that point. One could imagine an extremely long virtual instrument which could view a scene from many different vantages at once. In essence, this is what MISR does. There is a time lag of several minutes between the most forward and most aftward observations. This lag is short enough so that scene changes are small, except for wind-driven cloud motion. The problem of co-registration of data from the different cameras is handled by resampling data from each channel onto a common map projection. This common map projection, called SOM, is described in the next section.

Figure A-2 Diagrams depicting the Multi-Angle concept

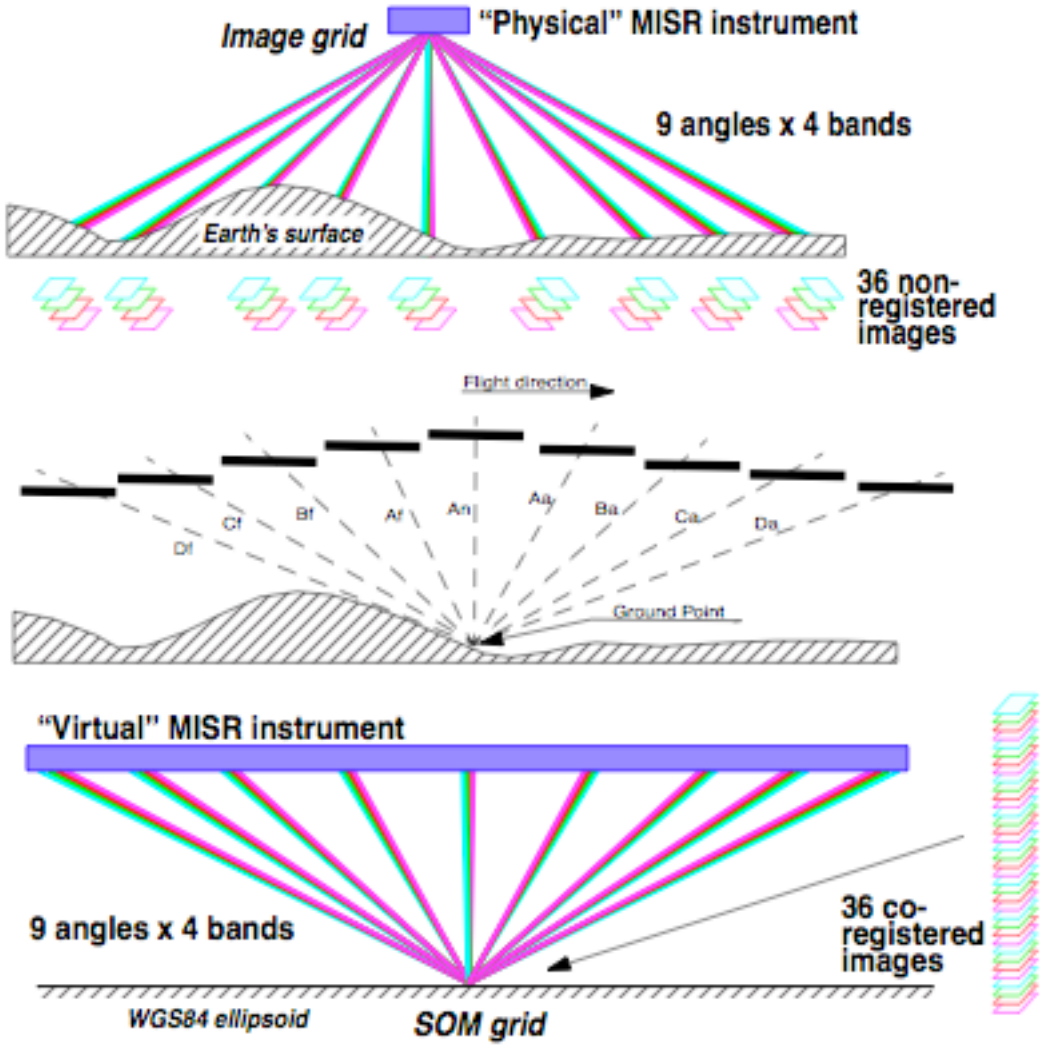

A.3 Background: The SOM Projection

MISR acquires data continuously down the entire daylit side of its orbit. The resulting image is a long, narrow "shoestring" swath which covers a vast geographic range. The SOM map projection was designed for Landsat to support continuous images of this extent. SOM is an acronym for Space Oblique Mercator. In SOM, shape distortion and scale errors are negligible throughout the length of the MISR swath near the satellite ground track. By putting MISR products in the SOM map projection, the complications of projection distortion were removed from geophysical algorithm development and data processing strategy.

Figure A-3 Sample Partial MISR Swath in SOM vs. Distorted Geographic Lat/Lon

For the majority of MISR data products, SOM is used as the reference map projection. The down side to this scheme is that most users are not familiar with SOM. The following is a brief explanation of the qualitative differences between SOM coordinates and Lat/Lon coordinates. It is by no means a comprehensive introduction to the projection, which is best left to the projection's designer Snyder[2].

Paths: Polar-orbiting satellites such as Landsat and Terra follow a pattern of orbits which repeats after 233 unique orbits in order to cover the entire globe. Each of the 233 possible orbits is called a path. SOM defines a separate projection for each of these 233 paths. For MISR, a path begins at a particular longitude as the satellite crosses the ascending nightside equator. This is referred to as the longitude of the ascending node. Whenever you are dealing with SOM coordinates, you must specify which path is of concern. This path implies a specific longitude of ascending node, which implies a specific SOM projection applicable to that path. All of this information is contained in the MISR product.

(X,Y): SOM coordinates, are called X and Y with units of meters. The X axis points more or less in the direction of satellite groundtrack motion, with the Y axis perpendicular to it. See figure below. The origin of the X axis is at the ascending node equator crossing. To give some feel for the scope of SOM coordinates, X=0 at the dark side equator, X=10 million meters near the North Pole, X=20 million meters at the descending dayside equator crossing, X=30 million meters near the South Pole, and X approaches 40 million meters near the next ascending node. Once the ascending node is reached, X values start over at 0 for the next path/projection.

(Y): SOM coordinate Y values may be negative or positive depending upon the side of the X axis on which the location falls. Do not confuse SOM coordinate Y values with internal MISR sample values, which are always positive. Relevant SOM Y values do not continually increase for the duration of the orbit as X values do. The ground track of the satellite actually follows a nearly sinusoidal curve along the X axis (Y=0); so, at some points on the earth, relevant Y values will be consistently larger than at others, and during a given portion of the orbit, they will be either dominantly positive or negative. The amplitude of the sine curve is about 1 million meters. It is good to note where your area of interest falls on the sine curve in order to determine whether or not you are getting appropriate X,Y values. In general, SOM Y values should be within the range +/- 1 or 2 million meters to stay within the MISR swath at the extremities of the sine curve.

Another SOM attribute to be wary of is that SOM Y is not analogous to longitude. Y indicates how far left or right you are from the SOM X axis, but near the poles this can be a north/south shift, whereas at the equator, changing Y is more east/west in orientation. At the equator, the angle between the SOM X axis and the equator is about 8 degrees.

Figure A-4 Attributes of SOM coordinates

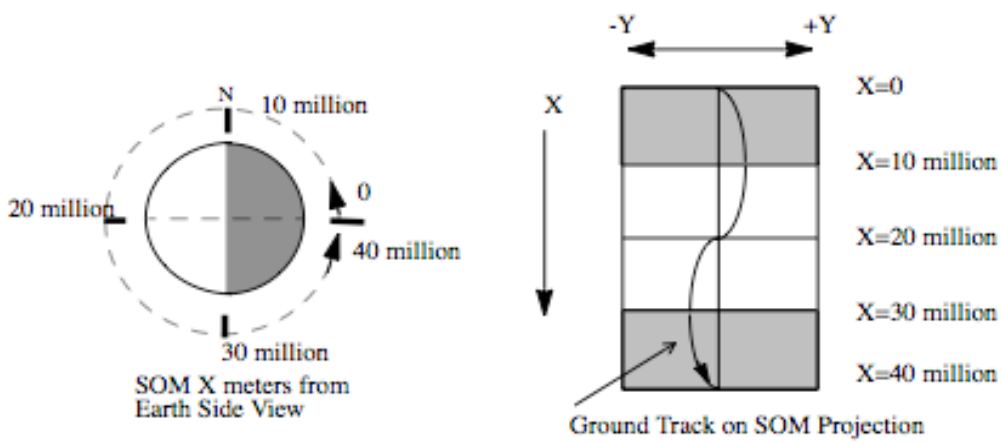

Width: It is also important to note that if you are "relatively near" the ground track, any lat/lon <-> SOM coordinate conversion you perform will be "reversible" to a reasonable degree of accuracy. On the other hand, if you are very far from the ground track, conversions may not appear to be accurate when reversed. This is caused by a combination of the numerical limitations within the conversion software. (The terms "relatively near" and "very far" are not strictly defined. Suffice it to say that the MISR swath, which extends a few hundred kilometers on either side of the ground track, has been deemed safe by MISR photogrammetrists.) The general lesson to be learned is that you need to know

which path you are on, and where the orbit ground track is, and then stay near it in order to get satisfactory performance with SOM coordinate conversions.

Line/Sample: Pixels in a MISR product are arranged in a regular 2-D array in SOM space. The indices to the array are called absolute line and sample, where line increases from top to bottom and sample increases from left to right. Therefore, if you know the SOM X,Y coordinates of any one point in the swath, you can deduce the SOM coordinates of any other point in the swath if you know the pixel resolution and absolute line/sample offset. Beware that the line and sample values in a MISR file are block-relative. They are not absolute.

Blocks: There is one added complication to SOM in MISR products. In order to simplify the job of processing and storing data over this immense geographical area, each MISR path was cut up into a series of pre-defined, uniformly-sized SOM boxes along the ground track. Each box-shaped region is called a Block. MISR blocks are similar to Landsat rows. Block-relative line and sample restart at 0,0 at the top left corner of each block. Therefore, a trivial conversion is required to determine the SOM coordinates of a given pixel in a MISR file, specified as (block, line, sample). Once SOM (X,Y) meters are known, GCTP coordinate conversion software[3] may be used convert between SOM coordinates and Lat/Lon.

A.4 Background: HDF-EOS

HDF-EOS Grid: All MISR products are in the HDF 4 format. However, it is easier to interpret the structures in MISR files if one realizes that they are actually HDF-EOS structures. The EOS project designed specialized data types and access routines on top of HDF 4. These datatypes and the soft ware libraries that read and write them are referred to collectively as HDF-EOS. The earliest prod ucts in the MISR production chain (L1A and L1B1) are single-camera HDF-EOS Swath data types. In HDF terminology, a Swath is just a big long SDS or array. Swaths contain no geolocation information other than the time at which a line was acquired. Most users are not interested in this raw Swath format. Instead, they wish to access map-projected data so that they can compare different measurements at a particular geographic location. The HDF-EOS data type for map-projected data is called "Grid." The HDF-EOS Grid model include metadata structures to store and software support to manipulate orbital parameters and map projection parameters along with the data. Most MISR data products consist of HDF-EOS Grid structures along with specific EOS-defined metadata entities. In theory, it should be very easy to retrieve location information for any MISR pixel in any map projection desired.

"Stacked Block" Grid: MISR data doesn't fit into the HDF-EOS Grid model very well. The designers of HDF-EOS Grid envisioned small, rectangular maps. Each MISR data swath is a long, curving shoestring which cuts through a huge range of latitudes and longitudes. A single Grid (rectangle) encompassing a typical MISR orbit would have to span the entire globe to bound the shoe string. Grids this large were thought to be intractable in the early days of EOS. So, the EOS project defined a special extension to the Grid model for MISR called "stacked block." A MISR block is an arbitrarily-sized SOM rectangle on the Earth. A MISR data swath could be contained in a series of adjacent blocks instead of one huge Grid. The blocks are stacked one on top of another. The lateral offset from block to block is not constant. (See the diagram below)

Block Offsets: A block may be placed directly beneath the one above it, or it may be shifted by an integral multiple of 17.6 km in the lateral (+/- SOM Y) direction. These shifts are all pre-defined so that the blocks comfortably span the Terra ground track to encompass a MISR data swath. Each block can be thought of as a separate HDF-EOS Grid, with the entire series comprises a single Grid structure in an HDF file. A MISR HDF-EOS Grid is therefore defined for a given path by the coordinates of the first (top) MISR block along with the standard projection metadata and a special array of offsets defining the locations of all subsequent blocks. Each subsequent block may be treated by the user as an independent Grid, provided that its position relative to the top block can be calcu lated. The HDF-EOS stacked block model involves automated storage and retrieval of offset meta data, but it does not perform offset calculations. The user must perform these calculations and assemble the desired set of blocks accordingly to obtain a mutli-block map.

Use Patterns: Two primary access paradigms have been noticed. Some users pull one block at a time out of a MISR product and use it in SOM space. Such users are often MISR-centric and manipulate data with their own software. Other users wish to pull out a geographically-defined subset of MISR data which may be smaller than one block or which may entail several blocks. The later type of user often prefers to work with the data in some map projection other than SOM with a commercial Image Processing or GIS software tool. In either case, familiarity with the MISR internal data representation is helpful.

Figure A-5 Depiction of MISR Stacked Block Grid

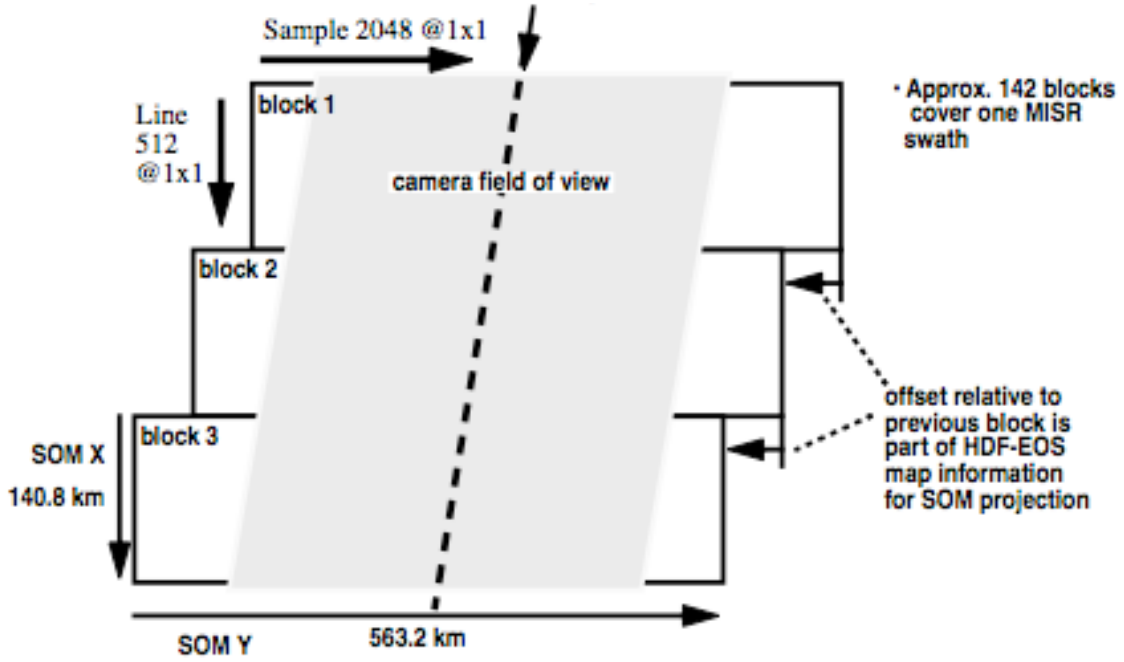

Surprises: There are several idiosyncrasies worth noting at this point. Notice that the MISR image does not fill the entire block. The unused edges of the block contain fill value. The extra room is needed for several reasons. First, the spacecraft ground track is actually inclined slightly with respect to the SOM X axis. Second, not all nine camera footprints overlap precisely. Third, the union of camera footprints gets wider within the blocks at higher latitudes as the overlap gets smaller. This is due to Earth rotation and fixed camera geometry. Finally, each block may be shifted left or right of those adjacent to it by some multiple of 17.6 km in order to follow the groundtrack.

180 Blocks: For each MISR orbit path, a set of 180 SOM blocks has been predefined. The 180 blocks cover a range larger than the daylit Earth in order to account for seasonal variations in the positions of day/night terminators. MISR only acquires data on the dayside of the terminator. For a single orbit, the terminator-to-terminator range in blocks is roughly 142. Therefore, MISR files contain data structures representing 180 blocks, but data is only found in 142 or fewer of these blocks. During winter months, for instance, the first 20 blocks of a MISR Grid may be vacant.

Figure A-6 MISR Blocks Follow the Curving Swath

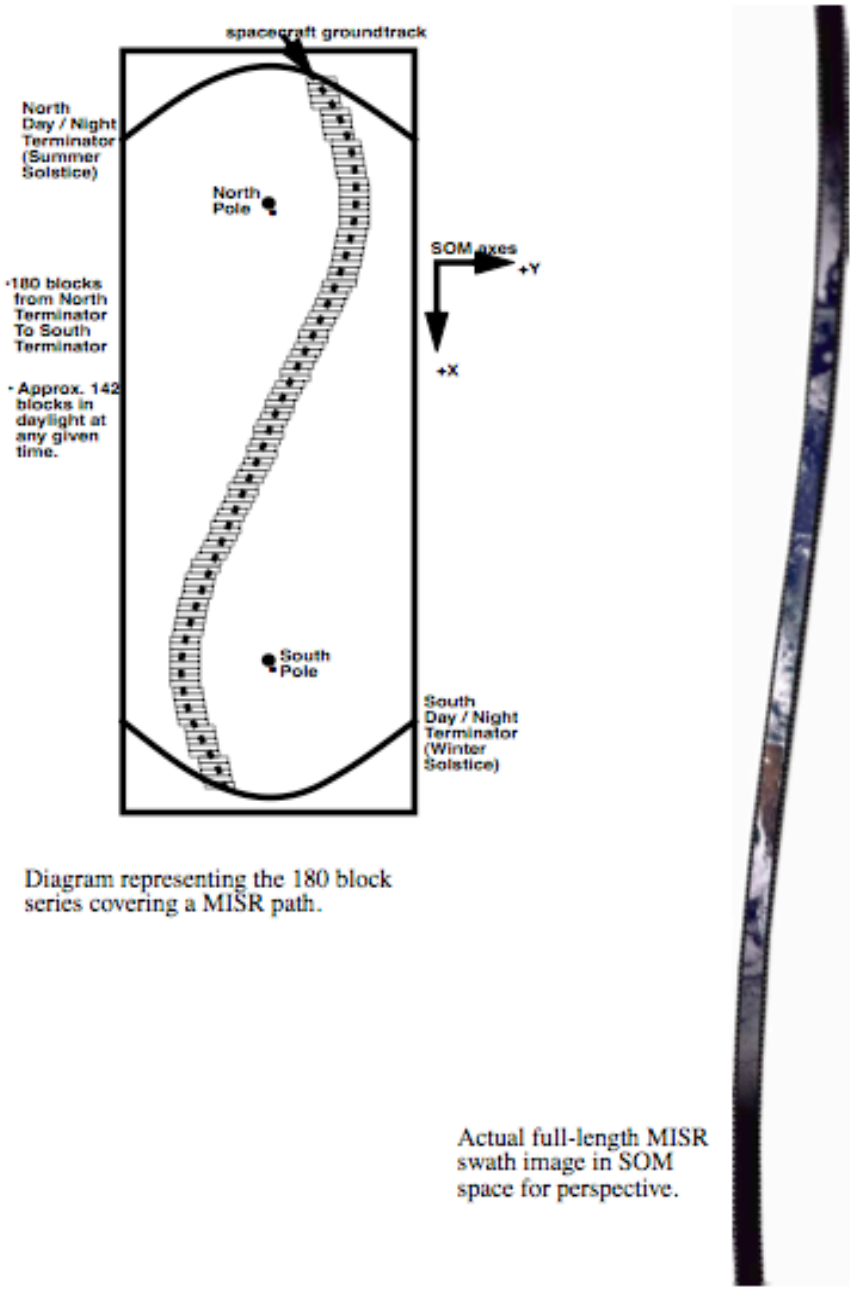

Diagram representing the 180 block series covering a MISR path.

Actual full-length MISR swath image in SOM space for perspective.

A.5 Coordinate Conversions

The following three subsections [A.5.1], [A.5.2], and [A.5.3] describe the steps required to perform accurate coordinate conversions on pixel locations in a MISR file. The descriptions include the extraction of metadata necessary to perform the conversions. A complete description of MISR file metadata relevant to these conversions is provided in section [A.6]. Example function calls relevant to these conversions in the C language are printed in section [A.7]. An assumption is made that the user has access to the HDF-EOS libraries, including the GCTP map projection library[3].

Forward Conversion: Lat/Lon->(block, line, sample) = [Lat/Lon-> SOM ->(block, line, sample)]

Given a position specified by Lat/Lon, two steps are required to determine the MISR block, line and sample coordinates. 1) Convert Lat/Lon to SOM(X,Y) meters using the GCTP conversion software. 2) Then convert SOM(X,Y) to MISR (block, line, sample). Forward conversion is useful for resam pling MISR data to another map projection. GCTP supports conversions from Lat/Lon to other projections using the same metadata required for the SOM->Lat/Lon conversion. Beware that the line and sample results for an arbitrary position may be fractional.

Inverse Conversion: (block, line, sample)->Lat/Lon = [(block, line, sample)->SOM->Lat/Lon]
Given a MISR pixel, as specified by block number, line number within block and sample number within block, two inverse steps are required to determine the Latitude and Longitude of the pixel center. 1) Convert (block, line, sample) to SOM(X,Y) meters. 2) Then convert SOM(X,Y) to Lat/Lon using the GCTP conversion software. The orbit path must be known a priori; metadata from the MISR product file in question is required; and the HDF-EOS software library along with GCTP must be utilized. Inverse conversion is useful for determining the location of features within native MISR data for comparison with other datasets.

Precision: Coordinate Conversions are reversible (Forward<->Inverse) with reasonable numerical precision for positions near the satellite groundtrack. Positions within the MISR data swath are thus reversible. Positions that are not near the satellite groundtrack are often better-described on another path and SOM projection. Coordinate conversions involving such positions are often not reversible. The causes of this limitation include map projection distortion as well as numerical approximation used in the algorithms in GCTP. The example function calls in section [A.7] provide a good use case to emulate.

A.5.1 SOM <-> Lat/Lon

Inverse: SOM -> Lat/Lon Given a pixel's position in SOM (X,Y) meters, assuming a particular orbit path, the following steps should be used to determine the corresponding Latitude and Longitude.

a) Choose a MISR product file with the appropriate orbit path and read from it the HDF-EOS projection params using the call GDprojinfo(). The projection params define the SOM projection used for this path. Users wishing to avoid HDF-EOS may refer to the Metadata Details section for choices for direct HDF reads of projection parameter info.

b) Convert the SOM coordinates to Lat/Lon with the GCTP library calls inv_init() and sominv(). inv_init takes the projection parameters from step a. as arguments.[1]
Beware that the order of the arguments to sominv(som_x, som_y, &lon, &lat) is neither intuitive nor well-documented.[2] See section [A.7] for examples.

Forward: Lat/Lon -> SOM Given a pixel's position in Lat/Lon coordinates assuming a particular MISR orbit path, the following steps should be used to determine the corresponding coordinates in SOM (X,Y) meters.

a) Choose a MISR product file with the appropriate orbit path and read from it the HDF-EOS projection params using the call GDprojinfo(). The projection params define the SOM projection used for this path. Users wishing to avoid HDF-EOS may refer to the Metadata Details section for choices for direct HDF reads of projection parameter info.

b) Convert the Lat/Lon coordinates to SOM with the GCTP library calls for_init() and somfor(). for_init takes the projection parameters from step a. as arguments.[3]
Beware that the order of the arguments to somfor(lon, lat, &som_x, &som_y) is neither intuitive nor well-documented.

A.5.2 Inverse: MISR(block, line, sample) -> SOM(X,Y)

Given a MISR pixel specified by (block, line, sample), assuming a particular orbit path, the following steps should be used to determine the corresponding SOM(X,Y) coordinates in meters.

a) Pick a MISR file to read which corresponds to the orbit path in question.

b) Read origin block coords and block/pixel sizes for a band using HDF-EOS GDgridinfo()[4] [5]

From the origin coords (ulc[], lrc[]) and the sizes (Xdim, Ydim), compute the following values:

```
ULC.x = ulc[0]          !! JUST DO THIS. It is not a typo.
ULC.y = lrc[1]          !! Swapping ULC.y and LRC.y is a
LRC.y = ulc[1]          !! side-effect of an unusual definition of
```

1 The GCTP coordinate conversion library provides routines for converting between lat/lon and many other map projections.MISR uses the GCTP SOM projection A by default based on the projection parameter values. SOM A specifies the inclination angle and longitude of the ascending node unlike SOM B, which uses path number and is specific to Landsat.

2 In HDF-EOS, Lat/Lon coordinates are specified in degrees. GCTP functions expect Lat/Lon in radians.

3 GDprojinfo() actually returns the HDF-EOS projection parameters array which corresponds directly to the one required for the GCTP SOM initializations; but in addition, it returns the projection code (22 for SOM), the zone code (unused for SOM) and the spheroid code (WGS84 ellipsoid 12), all of which are required to call the GCTP routines. See [4] for more info.

4 Though it is recommended, the user does not have to use HDF-EOS routines to read relevant metadata val ues. If some other means of accessing MISR files is desired, see "Metadata Details" on page 358. Beware that the definitions of ULC.y and LRC.y are not the same for all metadata fields!

5 Each MISR band may be of a different resolution. So, you need to obtain the 1st block origin coordinates and the block and pixel size information using the HDF-EOS call GDgridinfo() which reads from the textual StructMetaData. StructMetaData is present in all MISR HDF files.The GDgridinfo() call returns:

LRC.x = lrc[0] !! lrc vs. ulc in HDFEOS.[4]
Sx = (LRC.x - ULC.x) / Xdim !! Size of pixel in line direction in meters
Sy = (LRC.y - ULC.y) / Ydim !! Size of pixel in sample direction in meters

c) Adjust ULC coordinates from pixel corner to pixel center.
ULC.xc = ULC.x + (Sx / 2.0)
ULC.yc = ULC.y + (Sy / 2.0)

d) Read the block offsetArray using the HDF-EOS call GDblkSOMoffset(). It returns an array of offsets specified in pixels at Sx resolution. Each offset is relative to the block above. The HDF-EOS call actually reads from the vdata structure _BLKSOM:<gridname>.

e) Calculate SOM.x and SOM.y for BlockNumber(**b**), pixel(**line, sample**) as:
SOM.x = ULC.xc + [(b - 1) * Xdim * Sx] + (line * Sx)

SOM.y = ULC.yc + [sample + offset] * Sy where **offset =** $\sum_{i=0}^{b-2} offsetArray[i]$

A.5.3 Forward: SOM(X,Y) -> MISR (block, line, sample)

Given a position in SOM(X,Y) meters, assuming a particular orbit path, the following steps should be used to determine the corresponding MISR pixel in (block, line, sample) coordinates.

a) Pick a MISR file to read which corresponds to the orbit path in question.

b) Read origin block coords and block/pixel sizes for a band using HDF-EOS GDgridinfo().

From the origin coords (ulc[], lrc[]) and the sizes (Xdim, Ydim), compute the following values:

ULC.x = ulc[0] !! JUST DO THIS. It is not a typo.
ULC.y = lrc[1] !! Swapping ULC.y and LRC.y is a
LRC.y = ulc[1] !! side-effect of an unusual definition of
LRC.x = lrc[0] !! lrc vs. ulc in HDFEOS.
Sx = (LRC.x - ULC.x) / Xdim !! Size of pixel in line direction in meters
Sy = (LRC.y - ULC.y) / Ydim !! Size of pixel in sample direction in meters

c) Adjust ULC coordinates from pixel corner to pixel center.
ULC.xc = ULC.x + (Sx / 2.0)
ULC.yc = ULC.y + (Sy / 2.0)

d) Convert SOM meters to local SOM representation in pixels relative to first block in this file.
SOM.xpix = (SOM.x - ULC.xc) / Sx
SOM.ypix = (SOM.y - ULC.yc) / Sy

e) Determine the block number.

Block = floor((SOM.xpix + 0.5) / Xdim) + 1 !! Coords are within this block.[1]

f) Determine line number within predetermined block.
Line = SOM.xpix - ((Block - 1) * Xdim)

g) Read the block offsetArray using the HDF-EOS call GDblkSOMoffset(). It returns an array of offsets specified in pixels at Sx resolution. Each offset is relative to the block above.

h) Determine the sample coordinate within the predetermined block.
Sample = SOM.ypix - offset where **offset** = $\sum_{i=0}^{Block-2} offsetArray[i]$

A.6 Metadata Details

There are a handful of characteristics of MISR Grid files which are critical for accurate and efficient data access. For instance, each MISR Grid is 180 blocks in length; however, roughly 142 sequential blocks actually contain valid data. File-Global metadata attributes Start_block and End Block tell the user the range and location of valid blocks within the 180 defined in the hdf file. The externally-mandated definitions of HDF-EOS Grid ULC and LRC are inverted for SOM! Therefore some coordinates in the table must be swapped. They are noted. Other custom metadata fields are very handy to know about. The following table allows users without access to HDF-EOS libraries to obtain critical geo-related metadata from the most convenient sources.

Note: All metadata coordinates refer to outside corner locations, not to centers of corner-pixels. Metadata values base-1 by convention. Block number is the most common example. Software developers often expect base-0, so beware.

Table A-1: MISR Metadata Sources

Metadata Location	Structural	Core	Gbl. File Attr.*	Grid Attr.*	Per Block Common Vdata*
Projection Parameters	ProjParams		various SOM_...		
OriginBlock Coordinates	UperLeftPointMtrs LowerRightMtrs - SOM meters - Beware! Y coor dinates swapped				Block_coor_ulc_som: _meter.x _meter.y Block_coor_lrc_som: _meter.x _meter.y
All Block Coordinates		GRINGPOINTLONGITUDE GRINGPOINTLATITUDE - Lat/Lon - Order(ULC, LLC, LRC, URC)			see above
Pixels per Block	XDim YDim			Block_size.size_x Block_size.size_y	
Pixel Size	(Derivable)			Block_size.resolution	

1 Real code should check Block, Line and Sample coordinates against valid ranges. Also, do not be fooled by X/Y inversion from standard video definition. See section “Background: The SOM Projection”.

				_x Block_size.resolution _y	
Block Offset Ary.	Special HDF-EOS vdatas, one per grid named _BLKSOM:<gridname>				
Valid Block Range			Start_block End block		
*** indicates MISR-unique metadata structure vs. standard ECS-required metadata.**					

A.7 Example Function Calls

The examples in this section illustrate the coordinate conversion scenarios described in this appendix. The GCTP software package is used to convert between SOM and Lat/Lon coordinates. C Programmers often understand C better than English. These examples are intended to address detailed questions about function interfaces, units and adjustments. Such issues are more easily addressed in this way than in prose. These examples are strictly intended for educational purposes.

In the following example scenario, map projection parameters are read from a real MISR HDF-EOS Grid file. Example coordinate conversions are made, and the function calls to HDF and GCTP library routines are shown in the proper sequence with proper arguments.

misrcoordex.c outlines a series calls to the example functions, HDF-EOS and the GCTP library to perform full MISR->Lat/Lon and Lat/Lon->MISR conversions.

misr_init() illustrates setup steps which simplify the remaining examples. It should be called done prior to calling misrfor() or misrinv(). These steps, mentioned in sections [A.5.2] and [A.5.3], include converting from relative to absolute coordinates and the swapping of ulc/rlc values.

misrfor() illustrates the forward conversion SOM(X,Y) -> (block, line, sample) described in Section [A.5.3].

misrinv() illustrates the inverse conversion (block, line, sample) -> SOM(X,Y) described in Section [A.5.2].

The files misrproj.h and errormacros.h are a headers included by the other examples to remove extraneous code so that the examples are more concise.

The Makefile shows how to include from and link to the necessary pieces of the GCTP, HDF and HDF-EOS libraries needed to complete the scenario.

The basic scenario outlined in misrcoordex.c is:

a. Use HDF-EOS to read necessary info from a MISR product.

b. Call misr_init() and som_init() once with the info read from the MISR product.

c. use combinations of (somfor()+misrfor()) or (misrinv()+sominv()) to perform as many for ward or inverse coordinate conversions as desired on this orbit path.

A.7.1 misrcoordex.c

```
#include <stdio.h>
#include <stdlib.h>
#include <string.h>
#include <hdf.h>
#include <HdfEosDef.h>
#include <proj.h>
#include “misrproj.h”
#include “errormacros.h”

#define MAXNDIM                 10

typedef struct {
  int  block;
  float line;
  float sample;
} pts_t;

int npts = 40;
pts_t pts[] = { {   1,      -0.5,      -0.5 }, \
                {   1, -0.499999, -0.499999 }, \
                {   1,       0.0,       0.0 }, \
                {   1,       0.5,       0.5 }, \
                {   1,     127.0,     511.0 }, \
                {   1,     127.5,     511.5 }, \
                {   1,     511.0,    2047.0 }, \
                {   1,     511.5,    2047.5 }, \
                {   1,    101.97,     64.23 }, \
                {   1,     101.0,      64.0 }, \
            {  65,      -0.5,      -0.5 }, \
                {  65, -0.499999, -0.499999 }, \
                {  65,       0.0,       0.0 }, \
                {  65,       0.5,       0.5 }, \
                {  65,     127.0,     511.0 }, \
                {  65,     127.5,     511.5 }, \
                {  65,     511.0,    2047.0 }, \
                {  65,     511.5,    2047.5 }, \
                {  65,    101.97,     64.23 }, \
                {  65,     101.0,      64.0 }, \
            {  91,      -0.5,      -0.5 }, \
                {  91, -0.499999, -0.499999 }, \
                {  91,       0.0,       0.0 }, \
                {  91,       0.5,       0.5 }, \
                {  91,     127.0,     511.0 }, \
                {  91,     127.5,     511.5 }, \
                {  91,     511.0,    2047.0 }, \
                {  91,     511.5,    2047.5 }, \
                {  91,    101.97,     64.23 }, \
                {  91,     101.0,      64.0 }, \
            { 180,      -0.5,      -0.5 }, \
                { 180, -0.499999, -0.499999 }, \
                { 180,       0.0,       0.0 }, \
                { 180,       0.5,       0.5 }, \
                { 180,     127.0,     511.0 }, \
```

```
                { 180,     127.5,     511.5 }, \
                { 180,     511.0,    2047.0 }, \
                { 180,     511.5,    2047.5 }, \
                { 180,    101.97,     64.23 }, \
                { 180,     101.0,      64.0 }, \
};

int main(int argc, char *argv[]) {

  int32          fid = FAIL;
  int32          gid = FAIL;
  int            igrid, i;
  int32          ngrid;
  int32          nline, nsample;
  double     lat_r, lon_r;
  double     savelon_r1, savelon_r2;
  double     somx, somy;
  int            b;
  float          l, s;
  int32          strbufsize;
  char           *filepath;
  char           **gridname;
  char           *gridlist;
  float64    ulc[2], lrc[2];
  int32          spherecode, zonecode, projcode;
  float64    projparam[NPROJ];
  float32    offset[NOFFSET];
  long           iflg;
  int            status;
  char           diffflg;
  int32          dim[MAXNDIM];
  char           dimlist[STRLEN];
  intn           hdfeos_status_code;
  void           *mem_status_code;
  long           (*for_trans[MAXPROJ+1])();
  long           (*inv_trans[MAXPROJ+1])();

  /* --------------- */
  /* Check arguments */
  /* --------------- */

  if (argc != 2) {
    fprintf(stderr, "Usage: %s hdfeos_grid_file\n", argv[0]);
    exit(1);
  }
  filepath = argv[1];

  /* ---------------------------------------------------- */
  /* Inquire and allocate memory for the hdfeos gridnames */
  /* This is only require if you need the gridnames       */
  /* ---------------------------------------------------- */

  hdfeos_status_code = GDinqgrid(filepath, NULL, &strbufsize);
  HDFEOS_ERROR_CHECK("GDinqgrid");

  mem_status_code = gridlist = (char *)malloc(strbufsize+1);
  MEM_ERROR_CHECK("malloc");

  hdfeos_status_code = ngrid = GDinqgrid(filepath, gridlist, NULL);
  HDFEOS_ERROR_CHECK("GDinqgrid");

  mem_status_code = gridname = (char **)malloc(ngrid * sizeof(char *));
```

```
MEM_ERROR_CHECK("malloc");

gridname[0] = strtok(gridlist, ",");
for (igrid = 1; igrid < ngrid; igrid++) gridname[igrid] = strtok(NULL,",");

/* ------------------------- */
/* Open the hdfeos grid file */
/* ------------------------- */

hdfeos_status_code = fid = GDopen(filepath, DFACC_READ);
HDFEOS_ERROR_CHECK("GDopen");

/* ---------------------------------------- */
/* Loop through all the grids because I can */
/* ---------------------------------------- */

for (igrid = 0; igrid < ngrid; igrid++) {

  /* ---------------------------- */
  /* Attach to the grid of choice */
  /* ---------------------------- */

  hdfeos_status_code = gid = GDattach(fid, gridname[igrid]);
  HDFEOS_ERROR_CHECK("GDattach");

  /* ---------------------------------------------------------------- */
  /* Inquire grid dimensions to check number of blocks               */
  /* Inquire grid info to get the number of lines/sample and ulc/lrc */
  /* Inquire SOM relative block offsets                              */
  /* Initialize misr block/line/sample projection routines           */
  /* ---------------------------------------------------------------- */

  hdfeos_status_code = GDinqdims(gid, dimlist, dim);
  HDFEOS_ERROR_CHECK("GDinqdims");
  if (dim[0] != NBLOCK) ERROR("File does not have 180 blocks");

  hdfeos_status_code = GDgridinfo(gid, &nline, &nsample, ulc, lrc);
  HDFEOS_ERROR_CHECK("GDgridinfo");

  hdfeos_status_code = GDblkSOMoffset(gid, offset, NOFFSET, "r");
  HDFEOS_ERROR_CHECK("GDblkSOMoffset");

  status = misr_init(NBLOCK, nline, nsample, offset, ulc, lrc);
  if (status) ERROR("misr_init");

  printf("\nFilename (path/orbit): %s\n", filepath);
  printf("Gridname: %s\n", gridname[igrid]);
  printf("Lines/Samples: (%d, %d)\n", nline, nsample);
  printf("ULC (x,y) (m): (%f, %f)\n", ulc[0], ulc[1]);
  printf("LRC (x,y) (m): (%f, %f)\n", lrc[0], lrc[1]);
  printf("Block offsets: (%f", offset[0]);
  for (i = 1; i < NOFFSET; i++) printf(", %f", offset[i]);
  printf(")\n");

  /* ------------------------------------------------------------ */
  /* Inquire grid projection info to get project codes/parameters */
  /* Initialize gctp SOM forward and inverse projection routines  */
  /* ------------------------------------------------------------ */

  hdfeos_status_code = GDprojinfo(gid, &projcode, &zonecode,
                                  &spherecode, projparam);
  HDFEOS_ERROR_CHECK("GDprojinfo");
```

```
for_init((long)projcode, (long)zonecode, (double*)projparam,
            (long)spherecode, NULL, NULL, &iflg, for_trans);
if (iflg) ERROR("for_init");

inv_init((long)projcode, (long)zonecode, (double*)projparam,
            (long)spherecode, NULL, NULL, &iflg, inv_trans);
if (iflg) ERROR("inv_init");

printf("GCTP projection code: %d\n", projcode);
printf("GCTP zone code (not used for SOM): %d\n", zonecode);
printf("GCTP sphere code: %d\n", spherecode);
printf("GCTP projection parameters: (%f",projparam[0]);
for (i = 1; i < NPROJ; i++) printf(", %f", projparam[i]);
printf(")\n");

/* ------------------------------------------------------------------- */
/* Detach from the grid because we don't need it anymore in this example */
/* We would need it if we go on to access fields, so don't detach here   */
/* ------------------------------------------------------------------- */

if (gid != FAIL) GDdetach(gid);

/* ------------------------------------------ */
/* Loop over some inverse transformations    */
/* (b,l.l,s.s) -> (X,Y) -> (lat,lon)         */
/* and over some forward transformations     */
/* (lat,lon) -> (X,Y) -> (b,l.l,s.s)         */
/* ------------------------------------------ */

printf("    (blk,     line  ,    sample  )    "
      "(        SOM X    ,        SOM Y    )    "
            "(    Lat   ,     Lon   )\n");

for (i = 0; i < npts; i++) {

  b = pts[i].block;
  l = pts[i].line;
  s = pts[i].sample;

  /* ------------------------------------------------------ */
  /* Inverse transformation (b,l.l,s.s) -> (X,Y) -> (lat,lon) */
  /* ------------------------------------------------------ */

  misrinv(b, l, s, &somx, &somy);      /* (b,l.l,s.s) -> (X,Y) */
  sominv(somx, somy, &lon_r, &lat_r);  /* (X,Y) -> (lat,lon) */

  printf("%2d: (%3d,%11.6f,%12.6f) -> (%17.6f,%17.6f) -> "
        "(%10.6f,%11.6f) --|\n",
            i, b, l, s, somx, somy, lat_r * R2D, lon_r * R2D);

  /* ------------------------------------------------------ */
  /* Forward transformation (lat,lon) -> (X,Y) -> (b,l.l,s.s) */
  /* ------------------------------------------------------ */

  somfor(lon_r, lat_r, &somx, &somy);  /* (lat,lon) -> (X,Y) */
  misrfor(somx, somy, &b, &l, &s);     /* (X,Y) -> (b,l.l,s.s) */

  if (b != pts[i].block) diffflg = '*';
  else diffflg = ' ';

  printf("  %c (%3d,%11.6f,%12.6f) <- (%17.6f,%17.6f) <- "
```

```
            "(%10.6f,%11.6f) <-|\n",
            diffflg, b, l, s, somx, somy, lat_r * R2D, lon_r * R2D);

  /* ------------------------------------------------- */
  /* Save the longitude of block 91 to find location of */
  /* equator crossing                                   */
  /* ------------------------------------------------- */

  if (pts[i].block == 91 &&
          pts[i].line == 0.0 &&
          pts[i].sample == 0.0) {
        savelon_r1 = lon_r;
  }
  if (pts[i].block == 91 &&
          pts[i].line == (float)(nline-1) &&
          pts[i].sample == (float)(nsample-1)) {
        savelon_r2 = lon_r;
  }
}

/* ------------------------------------------------- */
/* Determine block/line/sample of the equator crossing */
/* approximately in the center of the block           */
/* ------------------------------------------------- */

lat_r = 0.0;
if (savelon_r1 < 0.0 && savelon_r2 > 0.0 ||
        savelon_r1 > 0.0 && savelon_r2 < 0.0) {
  lon_r = (savelon_r1 - savelon_r2) / 2.0;
} else {
  lon_r = (savelon_r1 + savelon_r2) / 2.0;
}

/* ------------------------------------------------------ */
/* Forward transformation (lat,lon) -> (X,Y) -> (b,l.l,s.s) */
/* ------------------------------------------------------ */

somfor(lon_r, lat_r, &somx, &somy);  /* (lat,lon) -> (X,Y) */
misrfor(somx, somy, &b, &l, &s);     /* (X,Y) -> (b,l.l,s.s) */

printf("%2d: (%3d,%11.6f,%12.6f) <- (%17.6f,%17.6f) <- "
          "(%10.6f,%11.6f) = equator crossing\n",
          npts, b, l, s, somx, somy, lat_r * R2D, lon_r * R2D);

/* ------------------------------------- */
/* Extreme upper left corner (not center) */
/* ------------------------------------- */

somx = ulc[0];
somy = lrc[1];                  /* Notice the switch from ulc[1]. */

sominv(somx, somy, &lon_r, &lat_r);
misrfor(somx, somy, &b, &l, &s);

printf("%2d: (%3d,%11.6f,%12.6f) <- (%17.6f,%17.6f) -> "
          "(%10.6f,%11.6f) = ulc of block 1\n",
          npts+1, b, l, s, somx, somy, lat_r * R2D, lon_r * R2D);

/* ------------------- ------------------- */
/* Extreme lower right corner (not center) */
/* ------------------- ------------------ */
```

```
    somx = lrc[0];
    somy = ulc[1];                    /* Notice the switch from lrc[1]. */

    sominv(somx, somy, &lon_r, &lat_r);
    misrfor(somx, somy, &b, &l, &s);

    printf("%2d: (%3d,%11.6f,%12.6f) <- (%17.6f,%17.6f) -> "
                "(%10.6f,%11.6f) = lrc of block 1\n",
                npts+2, b, l, s, somx, somy, lat_r * R2D, lon_r * R2D);

    /* ------------------------------------- */
    /* Origin of SOM projection for this path */
    /* ------------------------------------- */

    somx = 0.0;
    somy = 0.0;

    sominv(somx, somy, &lon_r, &lat_r);
    misrfor(somx, somy, &b, &l, &s);

    printf("%2d: (%3d,%11.6f,%12.6f) <- (%17.6f,%17.6f) -> "
                "(%10.6f,%11.6f) = SOM origin (long of asc node)\n",
                npts+3, b, l, s, somx, somy, lat_r * R2D, lon_r * R2D);

    /* ---------------------------------------------------- */
    /* Origin of SOM projection plus 180 degrees longitude */
    /* ---------------------------------------------------- */

    lat_r = 0.0;
    lon_r = (lon_r > 0.0 ? lon_r - (180.0*D2R) : lon_r + (180.0*D2R));

    somfor(lon_r, lat_r, &somx, &somy);
    misrfor(somx, somy, &b, &l, &s);

    printf("%2d: (%3d,%11.6f,%12.6f) <- (%17.6f,%17.6f) <- "
                "(%10.6f,%11.6f) = SOM origin plus 180 in long.\n",
                npts+4, b, l, s, somx, somy, lat_r * R2D, lon_r * R2D);

    /* ------------------------------------- */
    /* Equator crossing using SOM X from above */
    /* ------------------------------------- */

    somy = 0.0;

    sominv(somx, somy, &lon_r, &lat_r);
    misrfor(somx, somy, &b, &l, &s);

    printf("%2d: (%3d,%11.6f,%12.6f) <- (%17.6f,%17.6f) -> "
                "(%10.6f,%11.6f) = equator crossing\n",
                npts+5, b, l, s, somx, somy, lat_r * R2D, lon_r * R2D);

  }

  if (fid != FAIL) GDclose(fid);
  if (gridlist) free(gridlist);
  if (gridname) free(gridname);

  printf("\nNotes:\n\n"
"1) Given a block, fractional line and fraction sample triplet the\n"
"   following transformations performed:\n\n"
"    Inverse transformation:     (b,l.l,s.s) -> (X,Y) -> (lat,lon) -|\n"
"                                |-------------------------------------|\n"
```

```
"    Forward transformation: |-> (lat,lon) -> (X,Y) -> (b,l.l,s.s)\n\n"
"2) The transforms marked with a * did not reproduce the same\n"
"   answer either because of rounding errors in the GCTP codes or because\n"
"   they are out of bounds of the particular grid.  The misr transform\n"
"   routines (misr_init, misrfor and misrinv) are designed to handle out\n"
"   of bounds conditions and return all -1's.  This enables a resampling\n"
"   routine to determine whether resampling can be done or not, if these\n"
"   routines are used for reprojection.\n\n"
"3) Notice that the ULC Y/LRC Y values returned by gridinfo are incorrectly \n"
"   switched when compared to transform number 0, 5 or 7 (depending\n"
"   on resolution).\n\n"
"4) Also note that the ULC/LRC values returned by gridinfo are for block 1\n"
"   extreme pixel edges (not pixel centers).\n\n"
"5) Note that SOM X is always increasing as blocks increase (in fact,\n"
"   SOM X is zero meters at the longitude of the ascending node - the\n"
"   5th parameter of projection paramters).  SOM Y tends to be mostly\n"
"   positive in the Northern blocks and negative in the Southern blocks.\n"
"   Each SOM path is a separate projection with the origin at the\n"
"   night side equator and the longitude of the ascending node.\n\n"
"6) The block offsets are the number of 1.1km subregions from the\n"
"   previous block.  The first offset is relative first block.\n\n"
"7) The 4th and 5th projection parameter are in the format of packed\n"
"   dddmmmsss.ss as documented in the GCTP codes (see paksz.c).\n\n"
"8) MISR uses the GCTP SOM projection A which specifies the inclination\n"
"   angle and longitude of the ascending node instead of path number\n\n"
"9) The last six transformations compute various special case locations.\n"
"   Note the direction of the transform arrows.  Can you determine why the\n"
"   lrc of block 1 is actually in block 2?  Hint: it is not the pixel\n"
"   center, but rather the edge.\n\n"
"10) Last note.  Remember that the SOM projection is singular at the poles\n"
"    and thus undefined there.\n\n"
            );
  exit(0);
}
```

A.7.2 misr_init.c

```
#include "misrproj.h"                    /* Prototype for this function */
#include "errormacros.h"        /* Error macros */
int nb;
int nl;
int ns;
float absOffset[NBLOCK];
float relOffset[NBLOCK-1];
double ulc[2];
double lrc[2];
double sx;
double sy;
double xc;
double yc;

#define FUNC_NAMEm "misr_init"

int misr_init(
const int    nblock,        /* Number of blocks */
const int        nline,         /* Number of lines in a block */
const int        nsample,       /* Number of samples in a block */
const float              relOff[NOFFSET],/* Block offsets */
```

```
const double        ulc_coord[],    /* Upper left corner coord. in meters */
const double        lrc_coord[]     /* Lower right corner coord. in meters */
)
{
  int               i;              /* Offset index */
  char              msg[STRLEN];    /* Warning message */

/* Argument checks */

  if (nblock < 1 || nblock > NBLOCK) {
    sprintf(msg,"nblock is out of range (1 < %d < %d)", nblock, NBLOCK);
    WRN_LOG_JUMP(msg);
  }

/* Convert relative offsets to absolute offsets */

  absOffset[0] = 0.0;
  for (i = 1; i < NBLOCK; i++) {
    absOffset[i] = absOffset[i-1] + relOff[i-1];
    relOffset[i-1] = relOff[i-1];
  }

/* Set ulc and lrc SOM coordinates */
/* Note; ulc y and lrc y are reversed in the structural metadata. */

  ulc[0] = ulc_coord[0];
  ulc[1] = lrc_coord[1];
  lrc[0] = lrc_coord[0];
  lrc[1] = ulc_coord[1];

/* Set number of blocks, lines and samples */

  nb = nblock;
  nl = nline;
  ns = nsample;

/* Compute pixel size in ulc/lrc units (meters) */

  sx = (lrc[0] - ulc[0]) / nl;
  sy = (lrc[1] - ulc[1]) / ns;

/* Adjust ulc to be in the center of the pixel */

  xc = ulc[0] + sx / 2.0;
  yc = ulc[1] + sy / 2.0;

  return(0);

 ERROR_HANDLE:
  return(1);
}
```

A.7.3 misrfor.c

```
#include "misrproj.h"           /* Prototype for this function */
#include "errormacros.h"        /* Error macros */
#include <math.h>               /* Prototype for floor */

extern int nb;
extern int nl;
```

```
extern int ns;
extern float absOffset[NBLOCK];
extern double ulc[2];
extern double lrc[2];
extern double sx;
extern double sy;
extern double xc;
extern double yc;

#define FUNC_NAMEm "misrfor"

int misrfor(
const double        x,              /* Output SOM X coordinate */
const double        y,              /* Output SOM Y coordinate */
int*                block,    /* Input block */
float*              line,     /* Input line */
float*              sample    /* Input sample */
)
{
  float             i;              /* Intermediate X coordinate */
  float             j;              /* Intermediate Y coordinate */
  int               b;              /* Intermediate block */
  float             l;              /* Intermediate line */
  float             s;              /* Intermediate sample */
  char              msg[STRLEN];    /* Warning message */

/* Compute intermediate coordinates */

  i = (float)((x - xc) / sx);
  j = (float)((y - yc) / sy);

/* Check for very small numbers in i and j and assume they are zero */

  i = (fabs(i) < 1E-5 ? 0.0 : i);
  j = (fabs(j) < 1E-5 ? 0.0 : j);

/* Compute block and check range */

  b = (int)(floor((i + 0.5) / nl)) + 1;
  if (b < 1 || b > nb) {
    sprintf(msg, "block is out of range (1 < %d < %d)", b, nb);
    WRN_LOG_JUMP(msg);
  }

/* Compute line and check range */

  l = (float)(i - ((b - 1) * nl));
  if (l < -0.5 || l > nl - 0.5) {
    sprintf(msg, "line is out of range (0 < %e < %d)", l, nl);
    WRN_LOG_JUMP(msg);
  }

/* Compute sample and check range */

  s = (float)(j - absOffset[b-1]);
  if (s < -0.5 || s > ns - 0.5) {
    sprintf(msg, "sample is out of range (0 < %e < %d)", s, ns);
    WRN_LOG_JUMP(msg);
  }

/* Set return values */
```

```
  *block = b;
  *line = l;
  *sample = s;

  return(0);

 ERROR_HANDLE:

  *block = -1;
  *line = -1.0;
  *sample = -1.0;
  return(1);
}
```

A.7.4 misrinv.c

```
#include "misrproj.h"                    /* Prototype for this function */
#include "errormacros.h"        /* Error macros */
extern int nb;
extern int nl;
extern int ns;
extern float absOffset[NBLOCK];
extern double ulc[2];
extern double lrc[2];
extern double sx;
extern double sy;
extern double xc;
extern double yc;

#define FUNC_NAMEm "misrinv"

int misrinv(
const int     block,     /* Input block */
const float              line,       /* Input line */
const float              sample,   /* Input sample */
double*                  x,                    /* Output SOM X coordinate */
double*                  y                     /* Output SOM Y coordinate */
)
{
  int                    n;                    /* Number of line to current block */
  char                   msg[STRLEN];     /* Warning message */

/* Check Arguments */

  if (block < 1 || block > NBLOCK) {
    sprintf(msg, "block is out of range (0 < %d < %d)", block, nb);
    WRN_LOG_JUMP(msg);
  }

  if (line < -0.5 || line > nl - 0.5) {
    sprintf(msg, "line is out of range (0 < %e < %d)", line, nl);
    WRN_LOG_JUMP(msg);
  }

  if (sample < -0.5 || sample > ns - 0.5) {
    sprintf(msg, "sample is out of range (0 < %e < %d)", sample, ns);
    WRN_LOG_JUMP(msg);
  }

/* Compute SOM x/y coordinates in ulc/lrc units (meters) */
```

```
  n = (int)((block - 1) * nl * sx);
  *x = (double)(xc + n + (line * sx));
  *y = (double)(yc + ((sample + absOffset[block-1]) * sy));

  return(0);

 ERROR_HANDLE:

  *x = -1e-9;
  *y = -1e-9;
  return(1);
}
```

A.7.5 misrproj.h

```
#ifndef MISRPROJ_H
#define MISRPROJ_H
/* Defines */

#define STRLEN      200
#define NBLOCK      180
#define NOFFSET     NBLOCK - 1
#define R2D         57.2957795131
#define D2R         1.745329251994328e-2
#define NPROJ       13

/* Prototypes */

int misr_init(
const int     nblock,       /* Number of blocks */
const int     nline,        /* Number of lines in a block */
const int     nsample,      /* Number of samples in a block */
const float   relOff[NOFFSET],/* Block offsets */
const double  ulc_coord[],  /* Upper left corner coord. in meters */
const double  lrc_coord[]   /* Lower right corner coord. in meters */
);

int misrfor(
const double  x,            /* Output SOM X coordinate */
const double  y,            /* Output SOM Y coordinate */
int*          block,    /* Input block */
float*        line,     /* Input line */
float*        sample    /* Input sample */
);

int misrinv(
const int     block,    /* Input block */
const float   line,     /* Input line */
const float   sample,   /* Input sample */
double*       x,            /* Output SOM X coordinate */
double*       y             /* Output SOM Y coordinate */
);

#endif /* MISRPROJ_H */
```

A.7.6 errormacros.h

```
#ifndef ERRORMACROS_H
#define ERRORMACROS_H
```

```
#include <stdio.h>

#define HDFEOS_ERROR_CHECK(msg) \
  if (hdfeos_status_code == FAIL) { \
     fprintf(stderr, "Error: %s at line %d\n", msg, __LINE__); \
     exit(1); \
  }

#define MEM_ERROR_CHECK(msg) \
  if (mem_status_code == NULL) { \
     fprintf(stderr, "Error: %s at line %d\n", msg, __LINE__); \
     exit(1); \
  }

#define ERROR(msg) \
   { \
     fprintf(stderr, "Error: %s at line %d\n", msg, __LINE__); \
     exit(1); \
  }

#ifdef MISRWARN
  #define WRN_LOG_JUMP(msg) \
   { \
      fprintf(stderr,"Warning: %s in %s <Line: %d>\n", \
              msg, FUNC_NAMEm, __LINE__); \
      goto ERROR_HANDLE; \
   }
#else
  #define WRN_LOG_JUMP(msg) goto ERROR_HANDLE;
#endif

#endif /* ERRORMACROS_H */
```

A.7.7 Makefile

```
CC=     gcc
#CFLAGS= -g -n32 -DMISRWARN -I$(HDFINC) -I$(HDFEOS_INC)
CFLAGS= -g -n32 -I$(HDFINC) -I$(HDFEOS_INC)
LDFLAGS=-L$(HDFEOS_LIB) -L$(HDFLIB) \
       -lhdfeos -lGctp -lmfhdf -ldf -ljpeg -lz –lm

OBJS=    misr_init.o \
         misrinv.o \
         misrfor.o

all: misrcoordex

misrcoordex: misrcoordex.o $(OBJS)
         $(CC) $(CFLAGS) -o $@ $@.o $(OBJS) $(LDFLAGS)

clean:
         /bin/rm -f misrcoordex misrcoordex.o $(OBJS)

misrcoordex.o $OBJS: misrproj.h errormacros.h
```

A.8 Appendix A Bibliography

[1] Lewicki, Scott, et. al., MISR Data Products Specifications -- Incorporating the Science Data Processing Interface Control Document, aka the MISR DPS, JPL D-13963, Revision D, Febru

ary, 2002. (http://eosweb.larc.nasa.gov/PRODOCS/misr/readme/dps_ne_icd.pdf)

[2] Snyder, John, Map Projections--A Working Manual, USGS Professional Paper 1395, 1987, Ch. 27, "Space Oblique Mercator Projection", pp. 214-229.

[3] U.S. Geological Survey, National Mapping Division, GCTP General Cartographic Transformation Package Software Documentation, 1993.

[4] Klein, Larry, HDF-EOS Library Users Guide for the ECS Project, Volume 2: Function Reference Guide, 170-TP-501-001, June, Raytheon Systems Company, upper Marlboro, MD, 1998, pages I-7 through I-12 and 2-152. (http://ivanova.gsfc.nasa.gov/hdfeos/HDF-EOS_REF.pdf)